GeoMax Zoom70/90



User Manual

Version 2.1
English

Introduction

Purchase

Congratulations on the purchase of the GeoMax Zoom70/90.



This manual contains important safety directions as well as instructions for setting up the product and operating it. Refer to "1 Safety Directions" for further information.

Read carefully through the User Manual before you switch on the product.



The content of this document is subject to change without prior notice. Ensure that the product is used in accordance with the latest version of this document.

Updated versions are available for download at the following Internet address:

https://partners.geomax-positioning.com/downloads_v2.htm

Product identification

The model and serial number of your product are indicated on the type plate.

Always refer to this information when you need to contact your agency or GeoMax authorised service centre.

Trademarks

- Windows is a registered trademark of Microsoft Corporation in the United States and other countries
- *Bluetooth*® is a registered trademark of Bluetooth SIG, Inc.
- SD Logo is a trademark of SD-3C, LLC.

All other trademarks are the property of their respective owners.

Validity of this manual

This manual applies to the Zoom70/90 instruments. Differences between the various models are marked and described.

Available documentation

Name	Description/Format		
Zoom70/90 Quick Guide	Provides an overview of the product together with technical data and safety directions. Intended as a quick reference guide.	✓	✓
Zoom70/90 User Manual	All instructions required in order to operate the product to a basic level are contained in the User Manual. Provides an overview of the product together with technical data and safety directions.	-	✓

NOTICE

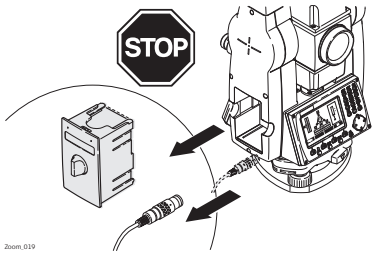

Do **NOT** remove the battery during operation of the instrument, or during the shutdown procedure.

This can result in a file system error and data loss!

Always switch off the instrument by pressing the On/Off key, and wait until the instrument has shutdown completely before removing the battery.

Table of Contents

1 Safety Directions 6
1.1 General Introduction 6
1.2 Definition of Use 6
1.3 Limits of Use 7
1.4 Responsibilities 7
1.5 Hazards of Use 7
1.6 Laser Classification 10
1.6.1 General 10
1.6.2 Distance, Measurements with Reflectors 10
1.6.3 Distance, Measurements without Reflectors 11
1.6.4 Red Laser Pointer 12
1.6.5 Automatic Prism Aiming AiM 14
1.6.6 Prism Search (Scout) - only available at Zoom90 15
1.6.7 Navigation Light (NavLight) 16
1.6.8 Laser Plummet 16
1.7 Electromagnetic Compatibility EMC 17
1.8 FCC Statement, Applicable in U.S. 19

2 Description of the System 20
2.1 System Components 20
2.2 System Concept 21
2.2.1 Software Concept 21
2.2.2 Power Concept 22
2.2.3 Data Storage Concept 22
2.3 Container Contents 23
2.4 Instrument Components 24

3 User Interface 26
3.1 Keyboard 26
3.2 Softkeys 27
3.3 Operating Principles 27

4 Operation 29
4.1 Main Menu 29
4.2 System Information 29
4.3 Setting Up the TPS Instrument 30
4.4 Setting up for Remote Control (with the RadioHandle) 32
4.5 Connecting to a Personal Computer 32
4.6 Power Functions 34
4.7 Batteries 35
4.7.1 Operating Principles 35
4.7.2 Battery for the Zoom70/90 Instrument 35
4.8 Working with the Memory Device 35
4.9 Working with Bluetooth 37
4.10 LED Indicators 37
4.11 Guidelines for Correct Results 38

5 Settings 40
5.1 Unit Settings 40
5.2 Date/Time Settings 40
5.3 Communication Settings 41
5.4 Atmospheric Settings 43

6 Apps 44
6.1 Update 44
6.2 Calibration 44
6.2.1 Overview 44
6.2.2 Preparation 45
6.2.3 Calibrate (a, l, t, i, c and AiM) 46

6.2.4 Adjusting the Circular Level of the Instrument and Tribrach 47
6.2.5 Adjusting the Circular Level of the Prism Pole 48
6.2.6 Inspecting the Laser Plummet of the Instrument 48
6.2.7 Servicing the Tripod 49
6.3 Format 49
7 Care and Transport 50
7.1 Transport 50
7.2 Storage 50
7.3 Cleaning and Drying 50
7.4 Maintenance 51
8 Technical Data 52
8.1 Angle Measurement 52
8.2 Distance Measurement with Reflectors 52
8.3 Distance Measurement without Reflectors 53
8.4 Distance Measurement - Long Range (LO mode) 54
8.5 Automatic Prism Aiming AiM 55
8.6 Prism Search (Scout) - only available at Zoom90 56
8.7 Conformity to National Regulations 57
8.7.1 Zoom70/90 57
8.7.2 RadioHandle 57
8.7.3 Dangerous Goods Regulations 58
8.8 General Technical Data of the Product 58
8.9 Scale Correction 61
8.10 Reduction Formulas 64
9 Software Licence Agreement 66
10 Glossary 67
Appendix A Menu Tree 69
Appendix B Directory Structure 70
Appendix C Pin Assignments 71

1 Safety Directions

1.1 General Introduction

Description

The following directions enable the person responsible for the product, and the person who actually uses the equipment, to anticipate and avoid operational hazards.

The person responsible for the product must ensure that all users understand these directions and adhere to them.

About warning messages

Warning messages are an essential part of the safety concept of the instrument. They appear wherever hazards or hazardous situations can occur.

Warning messages...

- make the user alert about direct and indirect hazards concerning the use of the product.
- contain general rules of behaviour.

For the users' safety, all safety instructions and safety messages shall be strictly observed and followed! Therefore, the manual must always be available to all persons performing any tasks described here.

DANGER, **WARNING**, **CAUTION** and **NOTICE** are standardised signal words for identifying levels of hazards and risks related to personal injury and property damage. For your safety, it is important to read and fully understand the following table with the different signal words and their definitions! Supplementary safety information symbols may be placed within a warning message as well as supplementary text.

Type	Description
DANGER	Indicates an imminently hazardous situation which, if not avoided, will result in death or serious injury.
WARNING	Indicates a potentially hazardous situation or an unintended use which, if not avoided, could result in death or serious injury.
CAUTION	Indicates a potentially hazardous situation or an unintended use which, if not avoided, may result in minor or moderate injury.
NOTICE	Indicates a potentially hazardous situation or an unintended use which, if not avoided, may result in appreciable material, financial and environmental damage.
☞	Important paragraphs which must be adhered to in practice as they enable the product to be used in a technically correct and efficient manner.

1.2 Definition of Use

Intended Use

- Measuring horizontal and vertical angles.
- Measuring distances.
- Recording measurements.
- Automatic target search, recognition and following.
- Visualising the aiming direction and vertical axis.
- Remote control of product.
- Data communication with external appliances.
- Computing with software.

Reasonably foreseeable misuse

- Use of the product without instruction.
- Use outside of the intended use and limits.
- Disabling safety systems.
- Removal of hazard notices.
- Opening the product using tools, for example screwdriver, unless this is permitted for certain functions.
- Modification or conversion of the product.
- Use after misappropriation.
- Use of products with recognisable damages or defects.
- Use with accessories from other manufacturers without the prior explicit approval of GeoMax.
- Inadequate safeguards at the working site.
- Aiming directly into the sun.

1.3 Limits of Use

Environment

Suitable for use in an atmosphere appropriate for permanent human habitation: not suitable for use in aggressive or explosive environments.

⚠WARNING

Working in hazardous areas, or close to electrical installations or similar situations.

Life Risk.

Precautions:

- ▸ Local safety authorities and safety experts must be contacted by the person responsible for the product before working in such conditions.

1.4 Responsibilities

Manufacturer of the product

GeoMax AG, CH-9443 Widnau, hereinafter referred to as GeoMax, is responsible for supplying the product, including the user manual and original accessories, in a safe condition.

Person responsible for the product

The person responsible for the product has the following duties:

- To understand the safety instructions on the product and the instructions in the User Manual.
- To ensure that it is used in accordance with the instructions.
- To be familiar with local regulations relating to safety and accident prevention.
- To inform GeoMax immediately if the product and the application becomes unsafe.
- To ensure that the national laws, regulations and conditions for the operation of the product are respected.

1.5 Hazards of Use

NOTICE

Dropping, misusing, modifying, storing the product for long periods or transporting the product

Watch out for erroneous measurement results.

Precautions:

- ▸ Periodically carry out test measurements and perform the field adjustments indicated in the User Manual, particularly after the product has been subjected to abnormal use as well as before and after important measurements.

DANGER

Risk of electrocution

Because of the risk of electrocution, it is dangerous to use poles, levelling staffs and extensions in the vicinity of electrical installations such as power cables or electrical railways.

Precautions:

- Keep at a safe distance from electrical installations. If it is essential to work in this environment, first contact the safety authorities responsible for the electrical installations and follow their instructions.



NOTICE

Remote control of product

With the remote control of products, it is possible that extraneous targets will be picked out and measured.

Precautions:

- When measuring in remote control mode, always check your results for plausibility.

WARNING

Lightning strike

If the product is used with accessories, for example masts, staffs, poles, you may increase the risk of being struck by lightning.

Precautions:

- Do not use the product in a thunderstorm.

WARNING

Distraction/loss of attention

During dynamic applications, for example stakeout procedures, there is a danger of accidents occurring if the user does not pay attention to the environmental conditions around, for example obstacles, excavations or traffic.

Precautions:

- The person responsible for the product must make all users fully aware of the existing dangers.

WARNING

Inadequate securing of the working site.

This can lead to dangerous situations, for example in traffic, on building sites and at industrial installations.

Precautions:

- Always ensure that the working site is adequately secured.
- Adhere to the regulations governing safety, accident prevention and road traffic.

CAUTION

Pointing product toward the sun

Be careful when pointing the product toward the sun, because the telescope functions as a magnifying glass and can injure your eyes and/or cause damage inside the product.

Precautions:

- Do not point the product directly at the sun.

⚠ CAUTION

Not properly secured accessories.

If the accessories used with the product are not properly secured and the product is subjected to mechanical shock, for example blows or falling, the product may be damaged or people can sustain injury.

Precautions:

- When setting up the product, make sure that the accessories are correctly adapted, fitted, secured, and locked in position.
- Avoid subjecting the product to mechanical stress.

⚠ WARNING

Inappropriate mechanical influences to batteries

During the transport, shipping or disposal of batteries it is possible for inappropriate mechanical influences to constitute a fire hazard.

Precautions:

- Before shipping the product or disposing it, discharge the batteries by the product until they are flat.
- When transporting or shipping batteries, the person in charge of the product must ensure that the applicable national and international rules and regulations are observed.
- Before transportation or shipping, contact your local passenger or freight transport company.

⚠ WARNING

Exposure of batteries to high mechanical stress, high ambient temperatures or immersion into fluids

This can cause leakage, fire or explosion of the batteries.

Precautions:

- Protect the batteries from mechanical influences and high ambient temperatures. Do not drop or immerse batteries into fluids.

⚠ WARNING

Short circuit of battery terminals

If battery terminals are short circuited e.g. by coming in contact with jewellery, keys, metallised paper or other metals, the battery can overheat and cause injury or fire, for example by storing or transporting in pockets.

Precautions:

- Make sure that the battery terminals do not come into contact with metallic objects.

⚠ WARNING

If the product is improperly disposed of, the following can happen:

- If polymer parts are burnt, poisonous gases are produced which may impair health.
- If batteries are damaged or are heated strongly, they can explode and cause poisoning, burning, corrosion or environmental contamination.
- By disposing of the product irresponsibly you may enable unauthorised persons to use it in contravention of the regulations, exposing themselves and third parties to the risk of severe injury and rendering the environment liable to contamination.
- The product includes parts of Beryllium inside. Any modification of some internal parts can release dust or fragments, creating health hazard.

Precautions:

- 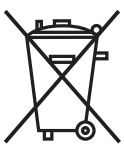

  The product must not be disposed with household waste.
  Dispose of the product appropriately in accordance with the national regulations in force in your country.
  Always prevent access to the product by unauthorised personnel.

  Product-specific treatment and waste management information can be received from your GeoMax distributor.

⚠WARNING

Improperly repaired equipment

Risk of injuries to users and equipment destruction due to lack of repair knowledge.

Precautions:

- ▸ Only authorised GeoMax Service Centres are entitled to repair these products.

1.6 Laser Classification

1.6.1 General

General

The following chapters provide instructions and training information about laser safety according to international standard IEC 60825-1 (2014-05) and technical report IEC TR 60825-14 (2004-02). The information enables the person responsible for the product and the person who actually uses the equipment, to anticipate and avoid operational hazards.

☞ According to IEC TR 60825-14 (2004-02), products classified as laser class 1, class 2 and class 3R do not require:
- laser safety officer involvement,
- protective clothes and eyewear,
- special warning signs in the laser working area

if used and operated as defined in this User Manual due to the low eye hazard level.

☞ National laws and local regulations could impose more stringent instructions for the safe use of lasers than IEC 60825-1 (2014-05) and IEC TR 60825-14 (2004-02).

1.6.2 Distance, Measurements with Reflectors

General

The EDM module built into the product produces a visible laser beam which emerges from the telescope objective.

The laser product described in this section is classified as laser class 1 in accordance with:

- IEC 60825-1 (2014-05): "Safety of laser products"

These products are safe under reasonably foreseeable conditions of operation and are not harmful to the eyes provided that the products are used and maintained in accordance with this User Manual.

Description	Value
Wavelength	658 nm
Pulse duration	800 ps
Pulse repetition frequency (PRF)	100 MHz
Maximum average radiant power	0.33 mW
Beam divergance	1.5 mrad x 3 mrad

Labelling

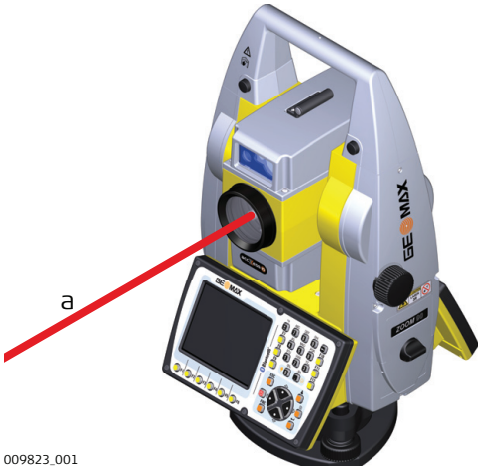

009823_001

a Laser beam

1.6.3 Distance, Measurements without Reflectors

General

The EDM module built into the product produces a visible laser beam which emerges from the telescope objective.

The laser product described in this section is classified as laser class 3R in accordance with:

- IEC 60825-1 (2014-05): "Safety of laser products"

Direct intrabeam viewing may be hazardous (low eye hazard level), in particular for deliberate ocular exposure. The beam may cause dazzle, flash-blindness and after-images, particularly under low ambient light conditions. The risk of injury for laser class 3R products is limited because of:

a) unintentional exposure would rarely reflect worst case conditions of (e.g.) beam alignment with the pupil, worst case accommodation,
b) inherent safety margin in the maximum permissible exposure to laser radiation (MPE)
c) natural aversion behaviour for exposure to bright light for the case of visible radiation.

Description	Value (A5/A10)
Wavelength	658 nm
Maximum average radiant power	4.8 mW
Pulse duration	800 ps
Pulse repetition frequency (PRF)	100 MHz
Beam divergence	0.2 mrad x 0.3 mrad
NOHD (Nominal Ocular Hazard Distance) @ 0.25s	44 m

⚠CAUTION

Class 3R laser products

From a safety perspective, class 3R laser products should be treated as potentially hazardous.

Precautions:

- ▸ Prevent direct eye exposure to the beam.
- ▸ Do not direct the beam at other people.

⚠CAUTION

Reflected beams aimed at reflecting surfaces

Potential hazards are not only related to direct beams but also to reflected beams aimed at reflecting surfaces such as prisms, windows, mirrors, metallic surfaces, etc.

Precautions:

- Do not aim at areas that are essentially reflective, such as a mirror, or which could emit unwanted reflections.
- Do not look through or beside the optical sight at prisms or reflecting objects when the laser is switched on, in laser pointer or distance measurement mode. Aiming at prisms is only permitted when looking through the telescope.

Labelling

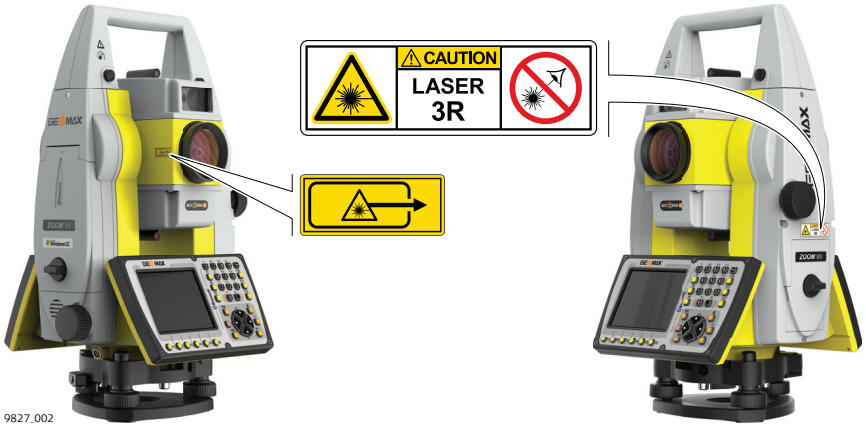



1.6.4 Red Laser Pointer

General

The laser pointer built into the product produces a visible red laser beam which emerges from the telescope objective.

The laser product described in this section is classified as laser class 3R in accordance with:

- IEC 60825-1 (2014-05): "Safety of laser products"

Direct intrabeam viewing may be hazardous (low eye hazard level), in particular for deliberate ocular exposure. The beam may cause dazzle, flash-blindness and after-images, particularly under low ambient light conditions. The risk of injury for laser class 3R products is limited because of:

a) unintentional exposure would rarely reflect worst case conditions of (e.g.) beam alignment with the pupil, worst case accommodation,
b) inherent safety margin in the maximum permissible exposure to laser radiation (MPE)
c) natural aversion behaviour for exposure to bright light for the case of visible radiation.

Description	Value (A5/A10)
Wavelength	658 nm
Maximum average radiant power	4.8 mW
Pulse duration	800 ps
Pulse repetition frequency (PRF)	100 MHz
Beam divergence	0.2 mrad x 0.3 mrad
NOHD (Nominal Ocular Hazard Distance) @ 0.25s	44 m

⚠CAUTION

Class 3R laser products

From a safety perspective, class 3R laser products should be treated as potentially hazardous.

Precautions:

- Prevent direct eye exposure to the beam.
- Do not direct the beam at other people.

⚠CAUTION

Reflected beams aimed at reflecting surfaces

Potential hazards are not only related to direct beams but also to reflected beams aimed at reflecting surfaces such as prisms, windows, mirrors, metallic surfaces, etc.

Precautions:

- Do not aim at areas that are essentially reflective, such as a mirror, or which could emit unwanted reflections.
- Do not look through or beside the optical sight at prisms or reflecting objects when the laser is switched on, in laser pointer or distance measurement mode. Aiming at prisms is only permitted when looking through the telescope.

Labelling

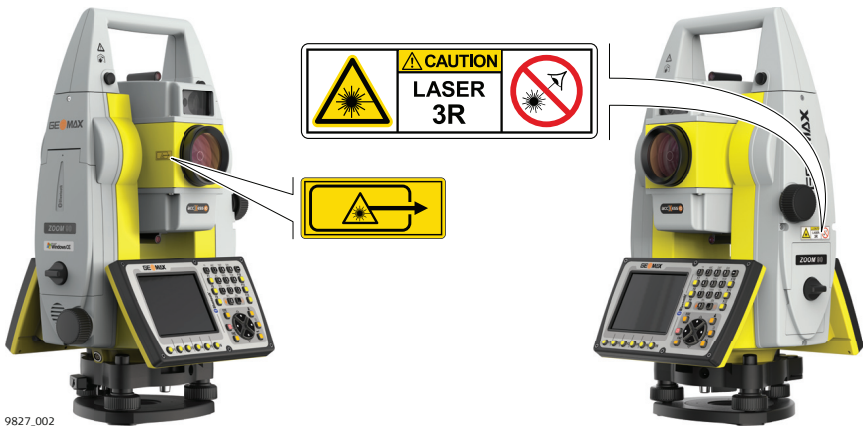



1.6.5 Automatic Prism Aiming AiM

General

The Automatic Prism Aiming built into the product produces an invisible laser beam which emerges from the telescope objective

The laser product described in this section is classified as laser class 1 in accordance with:

- IEC 60825-1 (2014-05): "Safety of laser products"

These products are safe under reasonably foreseeable conditions of operation and are not harmful to the eyes provided that the products are used and maintained in accordance with this User Manual.

Description	Value
Wavelength	785 nm
Maximum average radiant power	6.2 mW
Pulse duration	≤ 17 ms
Pulse repetition frequency (PRF)	≤ 180 Hz
Beam divergence	25 mrad

Labelling

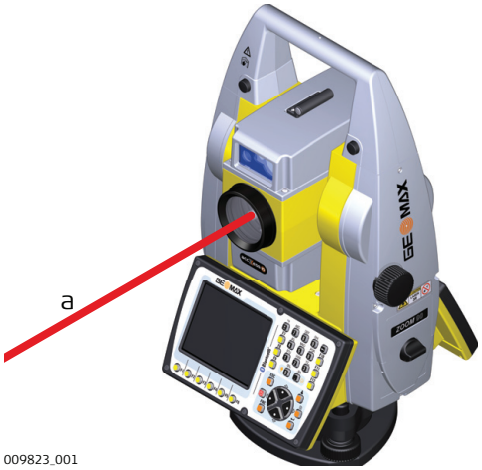

009823_001

a Laser beam

1.6.6 Prism Search (Scout) - only available at Zoom90

General

The Prism Search built into the product produces an invisible laser beam which emerges from the front side of the telescope.

The laser product described in this section is classified as laser class 1 in accordance with:

- IEC 60825-1 (2014-05): "Safety of laser products"

These products are safe under reasonably foreseeable conditions of operation and are not harmful to the eyes provided that the products are used and maintained in accordance with this User Manual.

Description	Value
Wavelength	850 nm
Maximum average radiant power	11 mW
Pulse duration	20 ns, 40 ns
Pulse repetition frequency (PRF)	24.4 kHz
Beam divergance	0.4 mrad x 700 mrad

Labelling

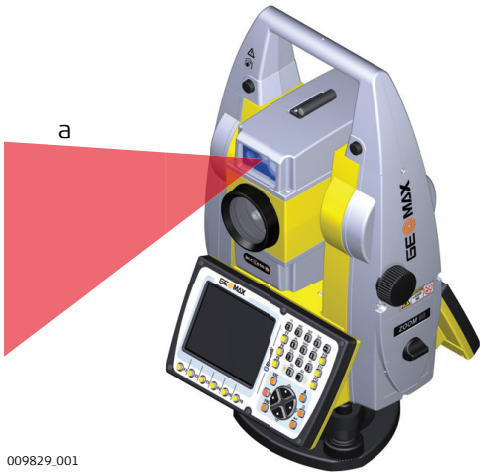

009829_001

a Laser beam

1.6.7 Navigation Light (NavLight)

General

The Navigation Light built into the product produces a visible LED beam which emerges from the front side of the telescope.

The product described in this section, is excluded from the scope of IEC 60825-1 (2014-05): “Safety of laser products”.
The product described in this section, is classified as exempt group in accordance with IEC 62471 (2006-07) and does not pose any hazard provided that the product is used and maintained in accordance with this user manual.

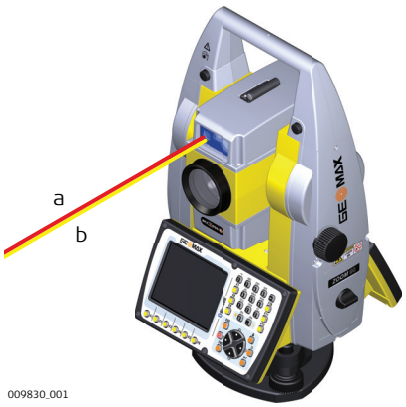

009830_001

a LED beam red
b LED beam yellow

1.6.8 Laser Plummet

General

The laser plummet built into the product produces a visible red laser beam which emerges from the bottom of the product.

The laser product described in this section is classified as laser class 2 in accordance with:

- IEC 60825-1 (2014-05): “Safety of laser products”

These products are safe for momentary exposures but can be hazardous for deliberate staring into the beam. The beam may cause dazzle, flash-blindness and after-images, particularly under low ambient light conditions.

Description	Value
Wavelength	640 nm
Maximum average radiant power	0.95 mW
Pulse duration	0.1 ms - cw
Pulse repetition frequency (PRF)	1 kHz
Beam divergance	<1.5 mrad

⚠CAUTION

Class 2 laser product

From a safety perspective, class 2 laser products are not inherently safe for the eyes.

Precautions:

- Avoid staring into the beam or viewing it through optical instruments.
- Avoid pointing the beam at other people or at animals.

Labelling

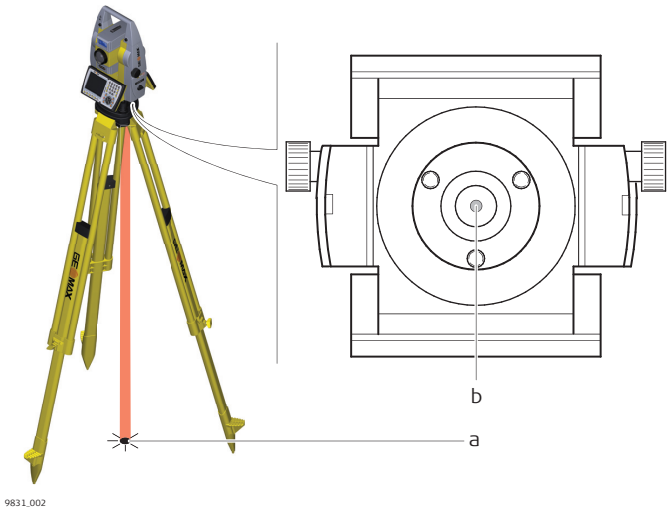

a Laser beam
b Exit for laser beam

1.7 Electromagnetic Compatibility EMC

Description

The term Electromagnetic Compatibility is taken to mean the capability of the product to function smoothly in an environment where electromagnetic radiation and electrostatic discharges are present, and without causing electromagnetic disturbances to other equipment.

⚠ WARNING

Electromagnetic radiation

Electromagnetic radiation can cause disturbances in other equipment.

Precautions:

- Although the product meets the strict regulations and standards which are in force in this respect, GeoMax cannot completely exclude the possibility that other equipment may be disturbed.

⚠ CAUTION

Use of the product with accessories from other manufacturers. For example field computers, personal computers or other electronic equipment, non-standard cables or external batteries

This may cause disturbances in other equipment.

Precautions:

- Use only the equipment and accessories recommended by GeoMax.
- When combined with the product, they meet the strict requirements stipulated by the guidelines and standards.
- When using computers, two-way radios or other electronic equipment, pay attention to the information about electromagnetic compatibility provided by the manufacturer.

⚠ CAUTION

Intense electromagnetic radiation. For example, near radio transmitters, transponders, two-way radios or diesel generators

Although the product meets the strict regulations and standards which are in force in this respect, GeoMax cannot completely exclude the possibility that function of the product may be disturbed in such an electromagnetic environment.

Precautions:

- Check the plausibility of results obtained under these conditions.

⚠ CAUTION

Electromagnetic radiation due to improper connection of cables

If the product is operated with connecting cables attached at only one of their two ends, for example external supply cables, interface cables, the permitted level of electromagnetic radiation may be exceeded and the correct functioning of other products may be impaired.

Precautions:

- While the product is in use, connecting cables, for example product to external battery, product to computer, must be connected at both ends.

⚠ WARNING

Use of product with radio or digital cellular phone devices

Electromagnetic fields can cause disturbances in other equipment, in installations, in medical devices, for example pacemakers or hearing aids and in aircrafts. Electromagnetic fields can also affect humans and animals.

Precautions:

- Although the product meets the strict regulations and standards which are in force in this respect, GeoMax cannot completely exclude the possibility that other equipment can be disturbed or that humans or animals can be affected.
- Do not operate the product with radio or digital cellular phone devices in the vicinity of filling stations or chemical installations, or in other areas where an explosion hazard exists.
- Do not operate the product with radio or digital cellular phone devices near to medical equipment.
- Do not operate the product with radio or digital cellular phone devices in aircrafts.
- Do not operate the product with radio or digital cellular phone devices for long periods with the product immediately next to your body.

1.8 FCC Statement, Applicable in U.S.

The greyed paragraph below is only applicable for products without radio.

WARNING

This equipment has been tested and found to comply with the limits for a Class B digital device, pursuant to part 15 of the FCC rules.

These limits are designed to provide reasonable protection against harmful interference in a residential installation.

This equipment generates, uses and can radiate radio frequency energy and, if not installed and used in accordance with the instructions, may cause harmful interference to radio communications. However, there is no guarantee that interference will not occur in a particular installation.

If this equipment does cause harmful interference to radio or television reception, which can be determined by turning the equipment off and on, the user is encouraged to try to correct the interference by one or more of the following measures:

- Reorient or relocate the receiving antenna.
- Increase the separation between the equipment and the receiver.
- Connect the equipment into an outlet on a circuit different from that to which the receiver is connected.
- Consult the dealer or an experienced radio/TV technician for help.

CAUTION

Changes or modifications not expressly approved by GeoMax for compliance could void the user's authority to operate the equipment.

Labelling internal battery ZBA400

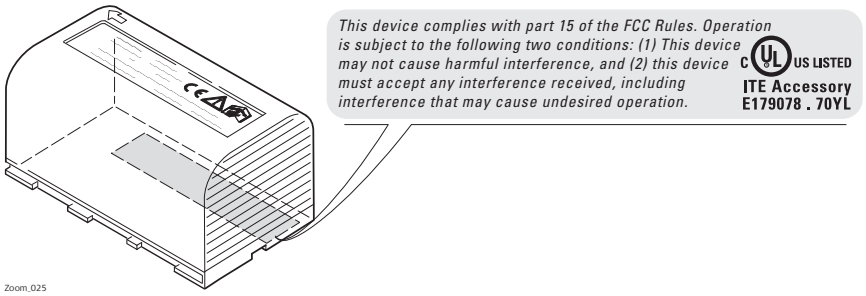

Labelling ZRT82

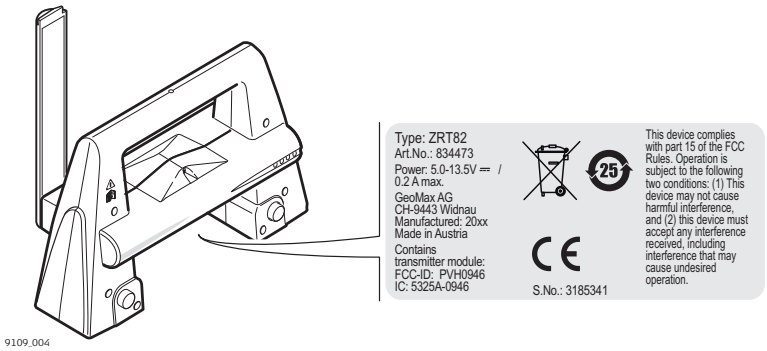

2 Description of the System

2.1 System Components

System components



a Zoom70/90
b Field controller

Main components

Component	Description
Zoom70/90 instrument	• A total station for measuring, calculating and capturing data. • Consisting of various models with a range of accuracy classes. • Combined with the multipurpose field controller to conduct remote control surveys.
Field controller	A multipurpose field controller enabling the remote control of the instrument.

Terms and abbreviations

The following terms and abbreviations can be found in this manual:

Term	Description
EDM	Electronic Distance Measurement EDM refers to the laser distancer incorporated into the instrument which enables distance measurement. Two measuring modes are available: • Prism mode. This mode refers to the ability to measure distances to prisms. • Reflectorless mode. This mode refers to the ability to measure distances without prisms.
accXess	accXess refers to the Reflectorless EDM technology which enables an increased measuring range with a smaller laser spot size. Two options are available: A5 and A10.

Term	Description
NavLight	Navigation Light A NavLight fitted to an instrument assists with prism targeting. It consists of two differently coloured flashing lights located in the instrument telescope housing. The person holding the prism can align themselves into the line of sight of the instrument.
AiM	Automated Prism Aiming. AiM refers to the instrument sensor which enables the automatic prism aiming.
TRack	Instruments fitted with Target aiming are referred to as Automated. Target aiming refers to the instrument sensor which enables the continuous tracking of targets.
Scout - only available at Zoom90	Scout refers to the instrument sensor, which enables the automatic rapid finding of a prism.
RadioHandle	A component is the ZRT82 RadioHandle. It is an instrument carry handle with an integrated radio modem with attached antenna.
Communication side cover	Communication side cover with integrated Bluetooth, SD card slot and USB port is standard for a Zoom70/90 instrument.

Available models

Model	Zoom70 Series	Zoom90 Series
Angle measurement	✓	✓
RS232, USB and SD card interface	✓	✓
Bluetooth	✓	✓
Internal Flash Memory (1 GB)	✓	✓
Hotshoe interface for RadioHandle	✓	✓
Navigation Light (NavLight)	✓	✓
Distance measurement to prism	✓	✓
Distance measurement to any surface (reflectorless)	✓	✓
Motorised	✓	✓
Optical Prism Search (Scout)	-	✓
Prism Tracking (TRack)	✓	✓
Automatic Prism Aiming (AiM)	✓	✓
GNSS based Prism Search (requires GPS enabled field controller and field software)	✓	✓

✓Standard - Not available

2.2 System Concept

2.2.1 Software Concept

Description

All instruments use the same software concept.

Software for Zoom70/90 models

Software type	Description
Instrument firmware (Zoom70_90_xx.fw)	This important software covers all functions of the instrument. The applications Settings and Level are integrated into the firmware and cannot be deleted.

Software type	Description
	The English language is integrated into the firmware and cannot be deleted.
Language files (Zoom70_90_xx_yy.sxx)	Numerous languages are available for the Zoom70/90 instruments. This software is also referred to as system language. xx = Language Code; yy = Country Code
	The English language is the default language. One language is chosen as the active language.

Software upload

☞ Uploading software can take some time. Ensure that the battery is at least 75% full before beginning the upload. Do not remove the battery during the upload process.

The GeoMax Toolkit is stored in the flash RAM of the instrument. To update the software, do the following:

1.	Download the most recent firmware file from http://www.geomax-positioning.com.
2.	Connect the instrument to your PC. Refer to "4.5 Connecting to a Personal Computer".
3.	Copy the firmware file into the system folder on the SD card.
4.	Start the instrument. In the GeoMax Toolkit select: **APPS\Update\Firmware**.
5.	Select the firmware file and press **OK**.
6.	A message appears when the upload is complete.

2.2.2 Power Concept

General

Use the batteries, chargers and accessories recommended by GeoMax to ensure the correct functionality of the instrument.

Power options

The internal power supply is provided by the ZBA400 battery.

If an external power supply is connected and the internal battery is inserted, then the external power is used.

2.2.3 Data Storage Concept

Description

Data is stored on a memory device. The memory device can be an SD card or internal memory. For data transfer an USB stick can also be used.

Memory device

SD card:	All instruments have an SD card slot fitted as standard. An SD card can be inserted and removed. Recommended capacity (but not limited to): 1 GB
USB stick:	All instruments have a USB port fitted as standard.
Internal memory:	All instruments have an internal memory fitted as standard. Available capacity: 1 GB

☞ While other SD cards can be used, GeoMax recommends to only use GeoMax SD cards and is not responsible for data loss or any other error that can occur while using a non-GeoMax card.

☞ Unplugging connecting cables or removing the SD card or USB stick during the measurement can cause loss of data. Only remove the SD card or USB stick or unplug connecting cables when the Zoom70/90 instrument is switched off.

Transfer data

Data can be transferred in various ways. Refer to "4.5 Connecting to a Personal Computer".

2.3 Container Contents

Container for instrument and accessories part 1 of 2

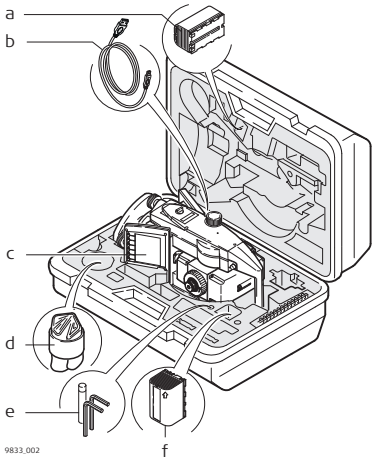

a Battery
b Data transfer cable*
c Instrument with tribrach and standard handle or RadioHandle
d Protective cover for instrument, sunshade for objective lens and cleaning cloth
e Allen key
f Spare Battery*

*optional

Container for instrument and accessories part 2 of 2

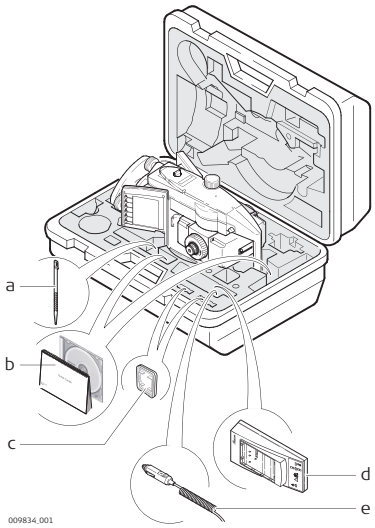

a Spare stylus*
b Quick Guide, CD
c SD card
d Battery charger
e Car adapter power plug for battery charger (stored under battery charger)

*optional

2.4 Instrument Components

Instrument components part 1 of 2



a	Carry handle
b	Optical sight
c	Telescope, integrating EDM, AiM, NavLight, Scout*
d	NavLight flashing diode - yellow and red
e	Scout, transmitter*
f	Scout, receiver*
g	Coaxial optics for angle and distance measurement, and exit port of visible laser beam for distance measurements
h	Communication side cover
i	Horizontal drive
j	Tribrach securing screw

*Zoom90 only

Instrument components part 2 of 2



a	Vertical drive
b	Focusing ring
c	Battery compartment
d	Tribrach footscrew
e	Stylus for touch screen
f	Touch screen
g	Circular level
h	Interchangeable eyepiece
i	Keyboard

Communication side cover

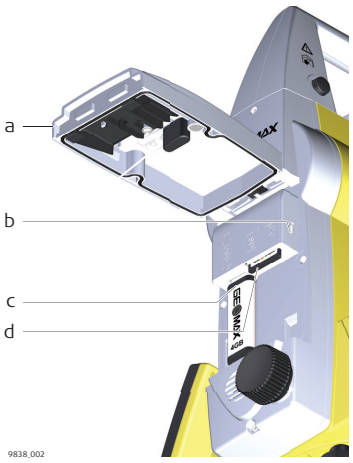

a	Compartment lid
b	USB device port (mini AB OTG)
c	USB host port for USB stick
d	SD card port

Instrument components for robotic

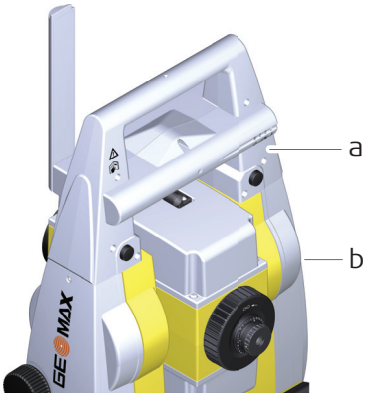

009839_001

a RadioHandle
b Communication side cover

3 User Interface

3.1 Keyboard

Keyboard



a	Function keys **F7** - **F9**	j	Arrow keys
b	± key	k	Page key
c	Alphanumeric keys	l	ENTER
d	Backspace	m	**FNC**
e	Function keys **F10** - **F12**	n	ON/OFF
f	Keyboard illumination/Access: <**FNC**> + <**0**>	o	Function keys **F1** - **F6**
g	Level key/Access: <**FNC**> + <**.**>		
h	**ESC**		
i	User key*		

* User key is not used by GeoMax Toolkit.

Keys

Key		Function
Function keys **F1**-**F6**	F1	Correspond to six softkeys that appear on the bottom of the screen when the screen is activated.
Function keys **F7**-**F12**	F7	User definable keys to execute chosen commands or access chosen screens.
Alphanumeric keys	JKL 4	Alphanumeric keypad for entry of text and numerical values.
ESC	ESC	Quits a screen or edit mode without saving changes. Returns to next higher level.
ON/OFF key		ON/OFF: If the instrument is already off: Turns on the instrument when held for 2 s. If the instrument is already on: Turns to Power Options menu when held for 2 s.
Enter key		Enter: Selects the highlighted line and leads to the next logical menu/dialog.

Key	Function
	Starts the edit mode for editable fields. Opens a selectable list.
User key 	User key is not used by GeoMax Toolkit.
Page key 	Displays the next screen when several screens are available.
FNC 	Used for key combinations. • <FNC>+<0> to toggle keyboard illumination. • <FNC>+<.> to go to the digital level.
Navigation key 	Controls the focus bar within the screen and the entry bar within a field.

3.2 Softkeys

Description

Softkeys are selected using the relevant **F1** to **F6** function keys. This chapter describes the functionality of the common softkeys used by the system.

The more specialised softkeys are described where they appear in the program chapters.

Common softkey functions

Key	Description
BACK	To return to the last active screen.
OK	If entry screen: Confirms measured or entered values and continues the process. If message screen: Confirms message and continues with selected action or returns to the previous screen to reselect an option.
DEFAULT	To reset all editable fields to their default values.
RETRY	To start a routine again.
CONF	To start the configuration mode of a function.

3.3 Operating Principles

Keyboard and touch screen

The user interface is operated either by the keyboard or by the touch screen with supplied stylus. The workflow is the same for keyboard and touch screen entry, the only difference lies in the way information is selected and entered.

Operation by keyboard

Information is selected and entered using the keys. Refer to "3.1 Keyboard" for a detailed description of the keys on the keyboard and their function.

Operation by touch screen

Information is selected and entered on the screen using the supplied stylus.

Operation	Description
To select an item	Tap on the item.
To start the edit mode in editable fields	Tap on the editable field.

Operation	Description
To highlight an item or parts of it for editing	Drag the supplied stylus from the left to the right.
To accept data entered into an editable field and exit the edit mode	Tap on the screen outside of the editable field.

Edit fields

ESC Deletes any change and restores the previous value.

Moves the cursor to the left

Moves the cursor to the right.

Sets focus to the previous setting.

Sets focus to the next setting.

Special characters

Character	Description
+/-	In the alphanumeric character set "+" and "-" are treated as normal alphanumeric characters with no mathematical function. "+" / "-" only appear in front of an entry.

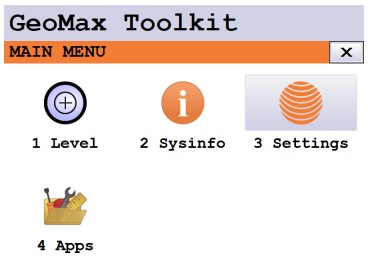

In this example selecting 1 on an alphanumeric keyboard starts **Level**.

4 Operation

4.1 Main Menu

Description

The **MAIN MENU** is the starting place for accessing most functionality of the instrument. It is displayed when selecting the GeoMax Toolkit from the WinCE main screen.

MAIN MENU

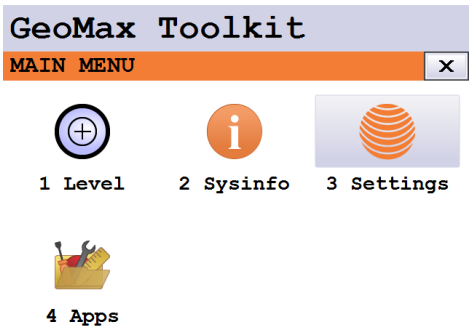

Description of the MAIN MENU functions

Function	Description
1 Level	To select and open **Level Up** screen. Refer to " Level up with the electronic level step-by-step".
2 Sysinfo	To select and start **Sysinfo**. Refer to "4.2 System Information".
3 Settings	To select and start **Settings**. Refer to "5 Settings".
4 Apps	To select and start **Apps**. Refer to 6 Apps

4.2 System Information

Description

The **SYSINFO** screen display instrument, system and firmware information, as well as date and time.

Access

Select **Sysinfo** from the **MAIN MENU**.

SYSINFO

This screen displays information about the instrument and operating system.

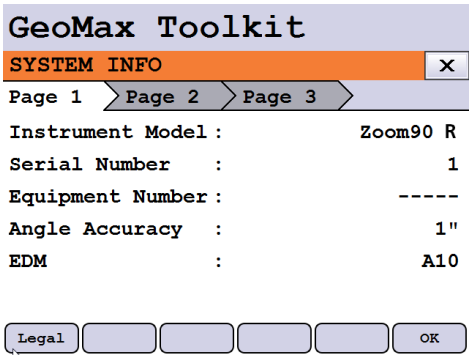

Legal To display legal info according open source software.

System information

Page 1

Field	Description
Instrument Model	Displays the type name of the instrument.
Serial Number	Displays the serial number of instrument.
Equipment Number	Displays the equipment number of instrument.
Angle Accuracy	Displays the accuracy of angle measurement.
EDM	Displays the type of EDM.

Page 2

Page 2 displays several version numbers of software and hardware components.

Page 3

Field	Description
Extended Robotic	Displays if the instrument is fully open for communication to all external software applications.
Virtual Robotic	Displays if the instrument is open for communication to all onboard software applications.
AiM360	Displays if the AiM360 function is available.
Scout360	Displays if the Scout360 function is available.

4.3 Setting Up the TPS Instrument

Instrument setup step-by-step

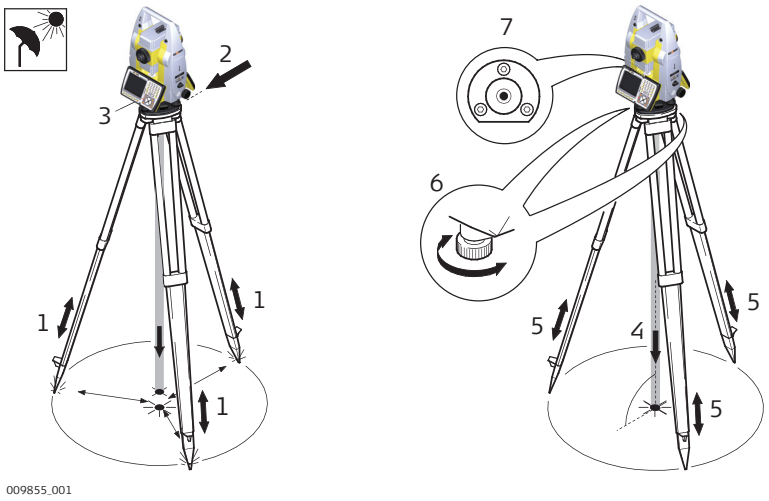

009855_001

☞	Torsion in tripod heads decreases overall accuracy. Always use a high-quality wooden tripod when using robotic instruments.
☞	Shield the instrument from direct sunlight and avoid uneven temperatures around the instrument.
1.	Extend the tripod legs to allow for a comfortable working posture. Position the tripod over the marked ground point, centring it as well as possible.
2.	Fasten the tribrach and instrument onto the tripod.

3.	Turn on the instrument by pressing . Activate the laser plummet and electronic level by pressing the key combination <**FNC**>+<**.**> or by starting up the GeoMax Toolkit and selecting from **MAIN MENU**: **Level**.
4.	Move the tripod legs (1) and use the tribrach footscrews (6) to centre the plummet (4) over the ground point.
5.	Adjust the tripod legs to level the circular level (7).
6.	By using the electronic level, turn the tribrach footscrews (6) to level the instrument precisely. Refer to Level up with the electronic level step-by-step.
7.	Centre the instrument precisely over the ground point (4) by shifting the tribrach on the tripod plate (2).
8.	Repeat steps 6. and 7. until the required accuracy is achieved.

Level up with the electronic level step-by-step

The electronic level can be used to level up the instrument precisely by using the footscrews of the tribrach.

1.	Turn the instrument until the tubular level is parallel to two footscrews.
2.	Centre the level on the instrument approximately by turning the footscrews of the tribrach.
3.	Centre the electronic level for the first axis by turning the two footscrews.
4.	Centre the electronic level for the second axis by turning the last footscrew.
☞	When the electronic level is centred and both axes are within the tolerance limit, the instrument has been levelled up.

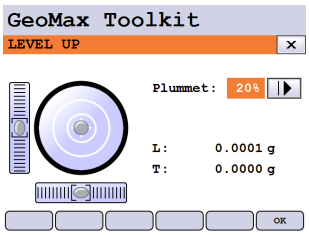

5.	Accept with **OK**.

4.4 Setting up for Remote Control (with the RadioHandle)

Setup for remote control with the RadioHandle

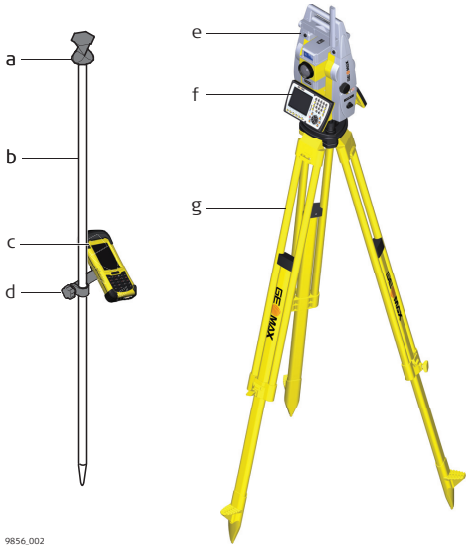

a Prism
b Prism pole
c Field controller with Bluetooth
d Holder
e RadioHandle
f Instrument
g Tripod

4.5 Connecting to a Personal Computer

Microsoft ActiveSync (for PCs with Windows XP operating system) or Windows Mobile Device Center (for PCs with Windows Vista or Windows 7/Windows 8/Windows 10 operating system) is the synchronisation software for Windows mobile-based pocket PCs. Microsoft ActiveSync or Windows Mobile Device Center enables a PC and a Windows mobile-based pocket PC to communicate.

Install GeoMax Zoom70/90 USB drivers

1.	Start the computer.
2.	Download the GeoMax Zoom70/90 USB driver from the GeoMax download page.
3.	Run the **Setup_GeoMax_USB_xx.exe** to install the drivers necessary for GeoMax Zoom70/90. Depending on the version (32 bit or 64 bit) of the operating system on your computer, you have to select between the three setup files following: • _USB_32bit.exe • _USB_64bit.exe • _USB_64bit_itanium.exe
4.	The **InstallShield Wizard** window appears. Ensure that all GeoMax devices are disconnected from your computer before you continue!
5.	Click **Next>**. The **Ready to Install the Program** window appears.
6.	**Install**. The drivers are installed on your computer. For computers with Windows Vista or Windows 7/Windows 8/ Windows 10 operating system: If not already installed, Windows Mobile Device Center is installed additionally.
7.	The **InstallShield Wizard Completed** window appears.
8.	Check **I have read the instructions** and click **Finish** to exit the wizard.

Connect USB cable to computer for the first time step-by-step

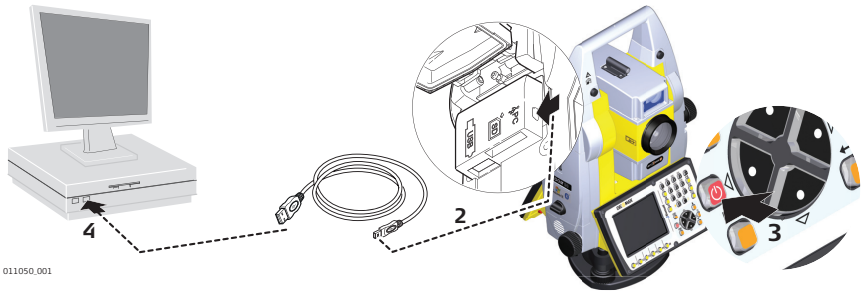

1.	Start the computer.
2.	Plug the USB cable into TPS instrument.
3.	Turn on the TPS instrument.
4.	Plug the USB cable into the USB port of the computer. The **Found New Hardware Wizard** starts up automatically.
5.	Check **Yes, this time only**. **Next>**.
6.	Check **Install the software automatically (Recommended)**. **Next>**. The software for **Remote NDIS based GeoMax Device** will be installed on your computer
7.	**Finish**.
8.	The **Found New Hardware Wizard** starts up automatically a second time.
9.	Check **Yes, this time only**. **Next>**.
10.	Check **Install the software automatically (Recommended)**. **Next>**. The software for **GeoMax USB Device** will be installed on your computer.
11.	**Finish**.
	For computerss with Windows XP operating system:
12.	Run the ActiveSync installation program if not already installed.
13.	Allow USB connections inside the **Connection Settings** window of ActiveSync.
	For computers with Windows Vista or Windows 7/Windows 8/Windows 10 operating system:
14.	Windows Mobile Device Center starts up automatically. If does not start automatically, start Windows Mobile Device Center.

Connect to computer by USB cable step-by-step

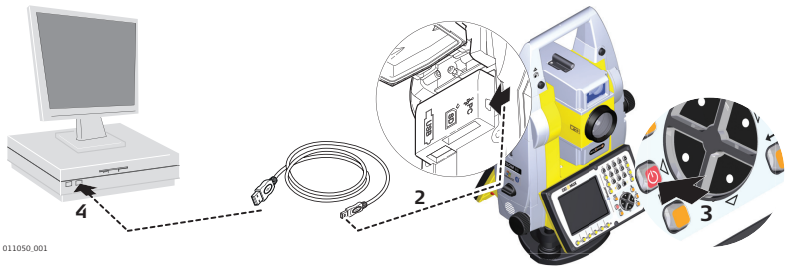

1.	Start the computer.
2.	Plug the USB cable into Zoom70/90 instrument.
3.	Turn on the Zoom70/90 instrument.
4.	Plug the USB cable into the USB port of the computer.
	For computers with Windows XP operating system:

☞ ActiveSync starts up automatically. If does not start automatically, start ActiveSync. If not already installed, run the ActiveSync installation program.

5. Allow USB connections inside the **Connection Settings** window of ActiveSync.

6. Click **Explore** in ActiveSync.

☞ The directories on the Zoom70/90 instrument are displayed under **Mobile Devices**.

For computers with Windows Vista or Windows 7/Windows 8 operating system:

☞ Windows Mobile Device Center starts up automatically. If does not start automatically, start Windows Mobile Device Center.

4.6 Power Functions

Turning instrument on

Press and hold power key for 2 s.

☞ Instrument must have a power supply.

Turning instrument off

Press and hold power key for 5 s.

☞ Instrument must be on.

Power Options menu

Press and hold power key for 2 s to open **Power Options** menu.

☞ Instrument must be on.

Option	Description
Turn off	Turn instrument off.
Stand-by	Put instrument into stand-by mode. ☞ In stand-by mode, the instrument shuts down and reduces power consumption. Rebooting from stand-by mode is quicker than a cold start after turning off.
Lock keyboard	Locks the keyboard. Option turns to **Unlock keyboard**.
Turn off touch screen	Disables touch screen. Option turns to **Turn on touch screen**.
Reset...	Performs one of the following options: • **Restart** (restarts Windows CE) • **Reset Windows CE** (resets Windows CE and communication settings to factory defaults) • **Reset installed software** (resets settings of all installed software) • **Reset Windows CE and installed software** (resets Windows CE and settings of all installed software)

4.7 Batteries

4.7.1 Operating Principles

First-time use/ charging batteries

- The battery must be charged before using it for the first time because it is delivered with an energy content as low as possible.
- The permissible environment is only indoor conditional and temperature range for charging is between 0 °C to +40 °C/+32 °F to +104 °F. For optimal charging, we recommend charging the batteries at a low ambient temperature of +10 °C to +20 °C/+50 °F to +68 °F if possible.
- It is normal for the battery to become warm during charging. Using the chargers recommended by GeoMax, it is not possible to charge the battery once the temperature is too high.
- For new batteries or batteries that have been stored for a long time (> three months), it is effectual to make only one charge/discharge cycle.
- For Li-Ion batteries, a single discharging and charging cycle is sufficient. We recommend carrying out the process when the battery capacity indicated on the charger or on a GeoMax product deviates significantly from the actual battery capacity available.

Operation/ discharging

- The batteries can be operated from –20 °C to +55 °C/–4 °F to +131 °F.
- Low operating temperatures reduce the capacity that can be drawn; high operating temperatures reduce the service life of the battery.

4.7.2 Battery for the Zoom70/90 Instrument

Change battery step-by-step

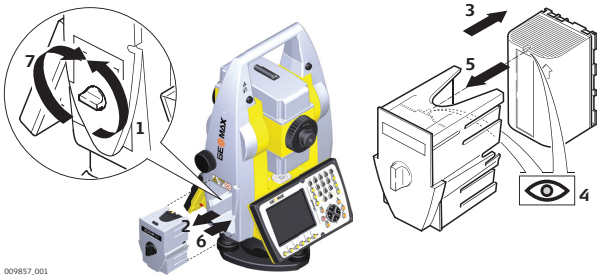

1.	Face the instrument so that the vertical drive screw is on the left. The battery compartment is below the vertical drive. Turn the knob to the vertical position, opening the lid of the battery compartment.
2.	Pull out the battery housing.
3.	Pull the battery from the battery housing.
4.	A pictogram of the battery is displayed inside the battery housing. This pictogram is a visual aid to help with placing the battery correctly.
5.	Place the battery into the battery housing, ensuring that the contacts are facing outward. Click the battery into position.
6.	Place the battery housing into the battery compartment. Push the battery housing in until it fits completely into the battery compartment.
7.	Turn the knob to lock the battery compartment. Ensure that the knob is returned to its original horizontal position.

4.8 Working with the Memory Device

☞
- Keep the card dry.
- Use it only within the specified temperature range.
- Do not bend the card.
- Protect the card from direct impacts.

☞ Failure to follow these instructions could result in data loss and/or permanent damage to the card.

Insert and remove an SD card step-by-step

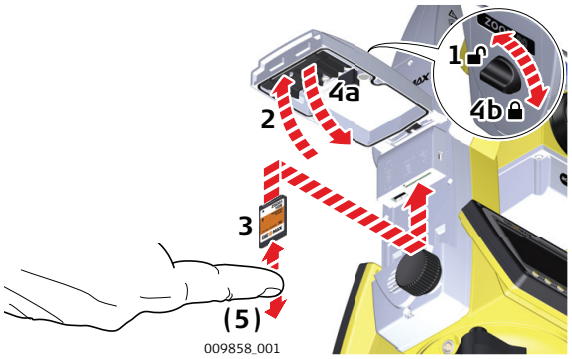

☞	The SD card is inserted into a slot inside the Communication side cover of the instrument.
1.	Turn the knob on the Communication side cover to the vertical position to unlock the communication compartment.
2.	Open the lid of the communication compartment to access the communication ports.
3.	To insert the SD card, slide it firmly into the SD slot until it clicks into position.
	☞ The card must be held with the contacts at the top and facing toward the instrument.
	☞ Do not force the card into the slot.
4.	To remove the SD card, gently press the top of the card to release it from the slot.
5.	Close the lid and turn the knob to the horizontal position to lock the communication compartment.

Insert and remove a USB stick step-by-step

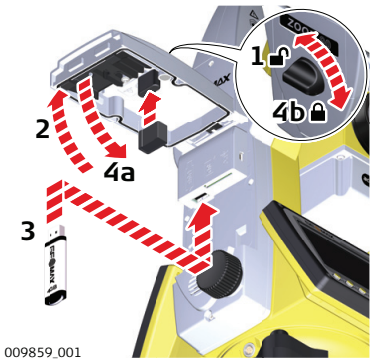

☞	The USB stick is inserted into the USB host port inside the Communication side cover of the instrument.
1.	Turn the knob on the Communication side cover to the vertical position to unlock the communication compartment.
2.	Open the lid of the communication compartment to access the communication ports.
3.	Slide the USB stick firmly into the USB host port until it clicks into position.
	☞ Do not force the USB stick into the port.
4.	Close the lid and turn the knob to the horizontal position to lock the compartment.

☞ To remove the USB stick, open the lid of the compartment and slide the USB stick out of the port.

4.9 Working with Bluetooth

Description

Zoom70/90 instruments can communicate with external devices by a Bluetooth connection. The instrument Bluetooth is a slave only. The Bluetooth of the external device will be the master, and therefore will control the connection and any data transfer.

Establishing a connection step-by-step

1.	On the instrument, ensure that the communication parameters are set to **Internal Bluetooth** or **Bluetooth Handle**. Refer to "5.3 Communication Settings".
2.	Activate Bluetooth on the external device. The steps required depend on the Bluetooth driver and other device-specific configurations. Refer to the User Manual of the device, for information on how to configure and search for a Bluetooth connection. *The instrument appears on the external device.*
☞	Some devices ask for the identification number of the Bluetooth. The default number for a Zoom70/90 Bluetooth is 0000. This can be changed by: 1. Select **Settings** from the **MAIN MENU**. 2. Select **Comm**. from the **SETTINGS** menu. 3. Press **CONF** from the **COMMUNICATION SETTINGS** screen. 4. Choose **Pin** from the **Internal Bluetooth** screen. Enter a new Bluetooth code. 5. Press **OK** to confirm the new Bluetooth code. Before the new Pin is active, a reboot of the system would be required.
3.	When the external Bluetooth device has located the instrument for the first time, a message displays on the instrument. The message contains the name of the external device and the requesting confirmation that connection to this device should be allowed. Press **YES** to allow or press **NO** to disallow this connection.
4.	The instrument Bluetooth sends out the instrument name and serial number to the external Bluetooth device.
5.	All further steps must be made in accordance to the User Manual of the external device.

4.10 LED Indicators

LED Indicators on Radio-Handle

Description

The RadioHandle has **L**ight **E**mitting **D**iode indicators. They indicate the basic RadioHandle status.

Diagram of the LED Indicators

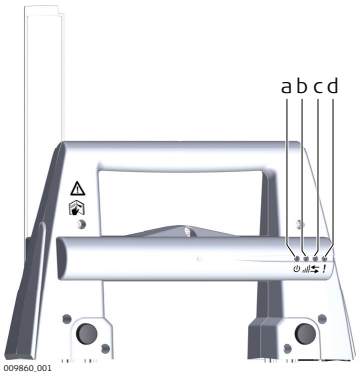

a Power LED
b Link LED
c Data Transfer LED
d Mode LED

Description of the LED Indicators

IF the	is	THEN
Power LED	off	power is off.

IF the	is	THEN
	green	power is on.
Link LED	off	no radio link to field controller.
	red	radio link to field controller.
Data Transfer LED	off	no data transfer to/from field controller.
	green or green flashing	data transfer to/from field controller.
Mode LED	off	data mode.
	red	configuration mode.

4.11 Guidelines for Correct Results

Distance measurement

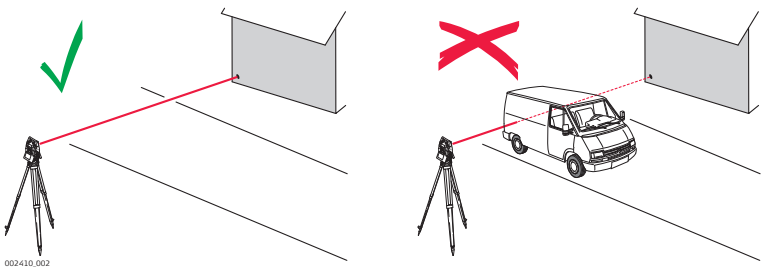

When measurements are being made using the red laser EDM, the results can be influenced by objects passing between the EDM and the intended target surface. This occurs because reflectorless measurements are made to the first surface returning sufficient energy to allow the measurement to take place. For example, if the intended target surface is the surface of a building, but a vehicle passes between the EDM and the target surface as the measurement is triggered, the measurement may be made to the side of the vehicle. The result is the distance to the vehicle, not to the surface of the building.

If using the long range measurement mode (> 1000 m, > 3300 ft) to prisms, and an object passes within 30 m of the EDM as the measurement is triggered, the distance measurement may be similarly effected due to the strength of the laser signal.

☞ Very short distances can also be measured reflectorless in Prism mode to well reflecting natural targets. The distances are corrected with the additive constant defined for the active reflector.

⚠ WARNING

Due to laser safety regulations and measuring accuracy, using the Long Range Reflectorless EDM is only allowed to prisms that are more than 1000m (3300ft) away.

☞ Accurate measurements to prisms should be made in Prism mode.

☞ When a distance measurement is triggered, the EDM measures to the object which is in the beam path at that moment. If a temporary obstruction, for example a passing vehicle, heavy rain, fog or snow is between the instrument and the point to be measured, the EDM may measure to the obstruction.

☞ Do not measure with two instruments to the same target simultaneously to avoid getting mixed return signals.

AiM/TRack

Instruments equipped with an AiM sensor permit automatic angle and distance measurements to prisms. The prism is sighted with the optical sight. After initiating a distance measurement, the instrument sights the prism centre automatically. Vertical and horizontal angles and the distance are measured to the centre of the prism. The TRack mode enables the instrument to follow a moving prism.

☞ As with all other instrument errors, the collimation error of the automatic aiming must be redetermined periodically. Refer to "6.2 Calibration" about checking and adjusting instruments.

☞ When a measurement is triggered while the prism is still moving, distance and angle measurements may not be made for the same position and coordinates may vary.

☞ If the prism location is changed too quickly, the target may be lost. Make sure that the speed does not exceed the figure given in the technical data.

5 Settings

5.1 Unit Settings

Access

1. Select **Settings** from the **MAIN MENU**.
2. Select **Unit** from the **SETTINGS** menu.

UNIT SETTINGS

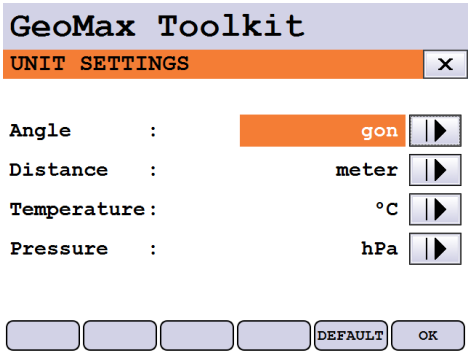

DEFAULT To set all values to factory default.

Field	Description	
Angle	Sets the units shown for all angular fields.	
	gon	Gon. Possible angle values: 0 gon to 399.999 gon
	deg	Degree decimal. Possible angle values: 0° to 359.999°
	mil	Mil. Possible angle values: 0 to 6399.99mil.
	° ' "	Degree sexagesimal. Possible angle values: 0° to 359°59'59"
☞	The setting of the angle units can be changed at any time. The actual displayed values are converted according to the selected unit.	
Distance	Sets the units shown for all distance and coordinate related fields.	
	meter	Meters [m].
	US-ft	US feet [ft].
	INT-ft	International feet [fi].
	Ft-in/16	US feet-inch-1/16 inch [ft].
Temperature	Sets the units shown for all temperature fields.	
	°C	Degree Celsius.
	°F	Degree Fahrenheit.
Pressure	Sets the units shown for all pressure fields.	
	hPa	Hecto Pascal.
	mbar	Millibar.
	mmHg	Millimeter mercury.
	inHg	Inch mercury.

5.2 Date/Time Settings

Access

1. Select **Settings** from the **MAIN MENU**.
2. Select **Date/Time** from the **SETTINGS** menu.

DATE / TIME

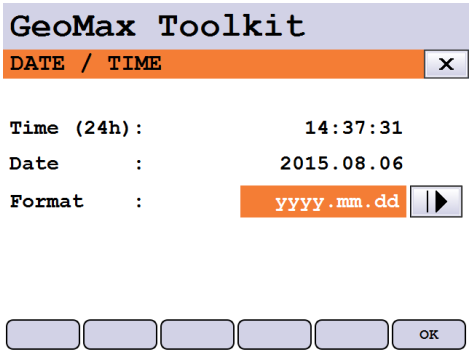

Field	Description	
Time (24h)		Displays the current time.
Date		Displays the current date as an example of the selected date format.
Format	**dd.mm.yyyy** **mm.dd.yyyy** **yyyy.mm.dd**	Displays how the date is shown in all date-related files.

5.3 Communication Settings

Description

For data transfer the communication parameters of the instrument must be set.

Access

1. Select **Settings** from the **MAIN MENU**.
2. Select **Comm.** from the **Settings** menu.

COMMUNICATION SETTINGS

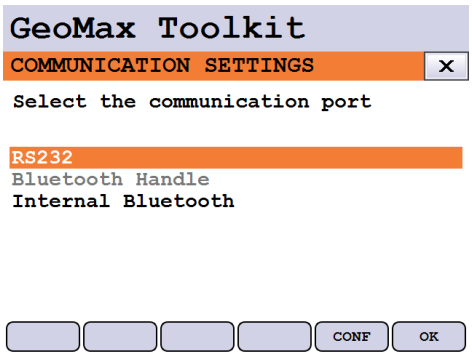

Field	Description
RS232	Communication is via the serial interface.
Bluetooth Handle	Communication is via Bluetooth Handle. This option is only available if the ZRT81 or ZRT82 Bluetooth handle is fitted on the instrument.
Internal Bluetooth	Communication is via Internal Bluetooth.

Press **OK** to confirm or **CONF** to proceed to configuration mode.

Configuration Bluetooth

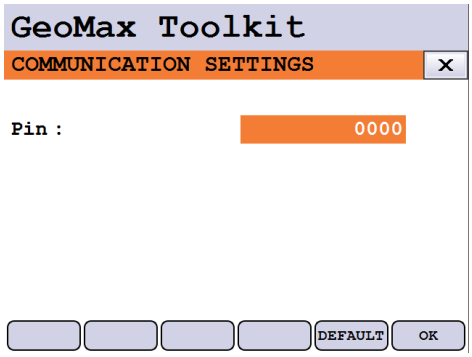

DEFAULT To set all values to factory default.

Field	Description
Pin	The Pin code needed to communicate to the instrument. The default value is 0000. Before the new Pin will be active, a reboot of the system would be required.

Configuration RS232

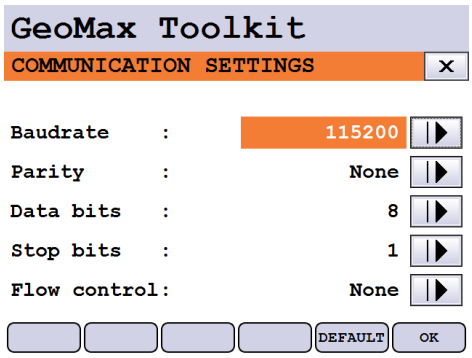

DEFAULT To set all values to factory default.

Field		Description
Baudrate		Speed of data transfer from receiver to device in bits per second. **1200, 2400, 4800, 9600, 14400, 19200, 38400, 57600, 115200**
Parity	**Even**	Even parity.
	Odd	Odd parity.
	None	No parity.
Data bits		Number of bits in a block of digital data.
	7	Data transfer is realised with 7 databits.
	8	Data transfer is realised with 8 databits.
Stop bits	**1**	Number of bits at the end of a block of digital data.
	2	
Flow control	**None**	
	RTS/ CTS	Hardware flow control enabled.

5.4 Atmospheric Settings

Access

1. Select **Settings** from the **MAIN MENU**.
2. Select **Atmos.** from the **SETTINGS** menu.

ATMOSPHERIC SETTINGS

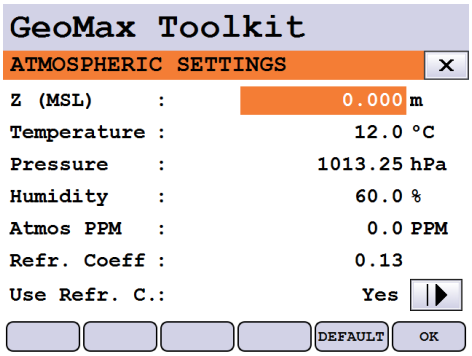

DEFAULT To set all values to factory default.

Field	Description
Z(MSL)	Sets the elevation above mean sea level.
Temperature	Sets the temperature.
Pressure	Sets the pressure.
Humidity	Sets the humidity.
Atmos PPM	The atmospheric ppm is calculated from the values in the previous fields.
Refr. Coeff	Refraction coefficient to be used for calculation.
Use Refr.C.	If **YES**, refraction correction is applied to measurements.

6 Apps

6.1 Update

Description

The GeoMax Toolkit software can be loaded via a SD card. This process is described below.

Access

1.	Select **Apps** from the **MAIN MENU**.
2.	Select **Update** from the **APPS** menu.

☞ Never disconnect power supply during data transfer. Battery capacity must be at least 75% capacity before commencing the upload.

Loading firmware, languages and key step-by-step

1.	To load firmware, select **Firmware**. To load license keys: Select **Key**. The **Select File!** screen appears. To load only languages: Select **Language** and skip to step 4.
2.	Select the firmware or key file from the system folder of SD card. All files must be stored in the system folder to be transferred to the instrument.
3.	Press **OK**.
4.	The **Upload Language!** screen appears displaying all language files in the system folder of the SD card. Select a language file for upload.
5.	Press **OK**.
6.	Press **Yes** on the power warning message to proceed and upload the firmware and/or selected languages.
7.	Once successfully loaded, the system will shutdown and restart again automatically depending on the type of update.

6.2 Calibration

6.2.1 Overview

Description

GeoMax instruments are manufactured, assembled and adjusted to the best possible quality. Quick temperature changes, shock or stress can cause deviations and decrease the instrument accuracy. It is therefore recommended to check and adjust the instrument from time to time. This check and adjust can be done in the field by running through specific measurement procedures. The procedures are guided and must be followed carefully and precisely as described in the following chapters. Some other instrument errors and mechanical parts can be adjusted mechanically.

Electronic adjustment

The following instrument errors can be checked and adjusted electronically:

l, t	Compensator longitudinal and transversal index errors
i	Vertical index error, related to the standing axis
c	Horizontal collimation error, also called line of sight error
a	Tilting axis error
AiM	AiM zero point error for Hz and V - option

If the compensator and the horizontal corrections are activated in the instrument configuration, every angle measured in the daily work is corrected automatically.

The results are displayed as errors but used with the opposite sign as corrections when applied to measurements.

View current adjustment errors

To view the adjustment errors currently used, select **MAIN MENU**: **Apps\Calib\View Adjustment Data**.

Mechanical adjustment

The following instrument parts can be adjusted mechanically:

- Circular level on instrument and tribrach
- Optical plummet - option on tribrach
- Allen screws on tripod

Precise measurements

To get precise measurements in the daily work, it is important:

- To check and adjust the instrument from time to time.
- To take high precision measurements during the check and adjust procedures.
- To measure targets in two faces. Some of the instrument errors are eliminated by averaging the angles from both faces.

☞

During the manufacturing process, the instrument errors are carefully determined and set to zero. As mentioned above, these errors can change and it is highly recommended to redetermine them in the following situations:

- Before the first use
- Before every high precision survey
- After rough or long transportation
- After long working periods
- After long storage periods
- If the temperature difference between current environment and the temperature at the last calibration is more than 20°C

Summary of errors to be adjusted electronically

Instrument error	Effects Hz	Effects V	Elimination with two face measurement	Automatically corrected with proper adjustment
c - Line of sight error	✓	-	✓	✓
a - Tilting axis error	✓	-	✓	✓
l - Compensator index error	-	✓	✓	✓
t - Compensator index error	✓	-	✓	✓
i - Vertical index error	-	✓	✓	✓
AiM Collimation error	✓	✓	-	✓

6.2.2 Preparation

☞

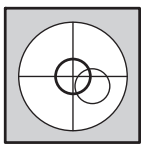

Before determining the instrument errors, the instrument has to be levelled using the electronic level.
The tribrach, the tripod and the underground should be stable and secure from vibrations or other disturbances.

Torsion in the tripod head can influence the calibration outcome. Make sure to perform the calibration on a heavy-duty wooden tripod or concrete pillar.

☞



The instrument should be protected from direct sunlight to avoid thermal warming.
It is also recommended to avoid strong heat shimmer and air turbulence. The best conditions are early in the morning or with overcast sky.

☞ Before starting to work, the instrument has to become acclimatised to the ambient temperature. Approximately two minutes per °C of temperature difference from storage to working environment, but at least 15 min, should be taken into account.

☞ Even after adjustment of the AiM, the crosshairs may not be positioned exactly on the centre of the prism after an AiM measurement has been completed. This outcome is a normal effect. To speed up the AiM measurement, the telescope is normally not positioned exactly on the centre of the prism. These small deviations/AiM offsets, are calculated individually for each measurement and corrected electronically. This means that the horizontal and vertical angles are corrected twice: first by the determined AiM errors for Hz and V, and then by the individual small deviations of the current aiming.

6.2.3 Calibrate (a, l, t, i, c and AiM)

Description

The calibration procedure determines the following instrument errors in one process:

a	Tilting axis error.
l, t	Compensator longitudinal and transversal index errors.
i	Vertical index error, related to the standing axis.
c	Horizontal collimation error, also called line of sight error.
AiM Hz	AiM zero point error for horizontal angle.
AiM V	AiM zero point error for vertical angle.

☞ AiM Hz and AiM V are excluded from calibration if you choose the "Calibrate without AiM" procedure. AiM Hz and AiM V are included if you choose the "Calibrate All" procedure.

Calibrate step-by-step

The following table explains the most common settings.

1.	**MAIN MENU**: **Apps\Calib\Calibrate All** or **Calibrate without AiM**.
2.	Level the instrument and press **OK**.
3.	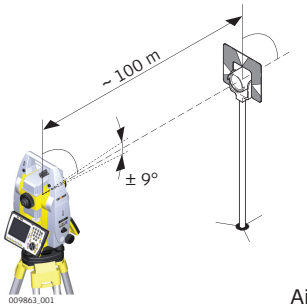 Aim the telescope accurately at a target at about 100 m distance. The target must be positioned within ±9 °/±10 gon of the horizontal plane.
4.	Press **OK** to measure and continue to the next step.
5.	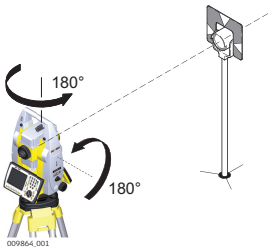 Motorised instruments change automatically to the other face. It is recommended carefully fine-point to the target manually.
6.	Press **OK** to measure and continue to the next step.
7.	Repeat steps 3,4,5 and 6 for the second set. Continue with step 8.

8.	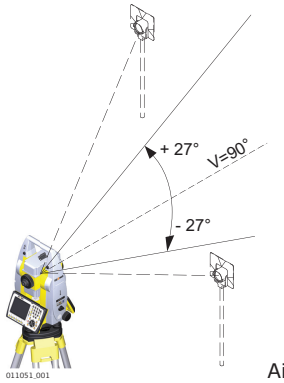 Aim the telescope accurately at a visual target at about 100 m distance or less if not possible. No distance reading is taken during these steps so a prism target is not required. The visual target must be positioned at least 27 °/30 gon above or beneath the horizontal plane.
9.	Press **OK** to measure and continue to the next step.
10.	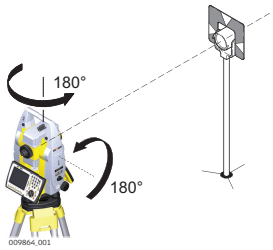 Motorised instruments change automatically to the other face. It is recommended carefully fine-point to the target manually.
11.	Press **OK** to measure and continue to the next step.
12.	Repeat steps 8,9,10 and 11 for the second set. Continue with step 13.
13.	The results are shown on the screen. If the values are okay, press **OK** to store or press **ESC** to decline.

6.2.4 Adjusting the Circular Level of the Instrument and Tribrach

Adjusting the circular level step-by-step

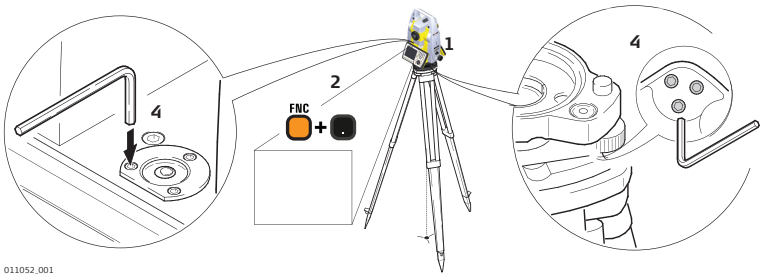

1.	Place and secure the instrument into the tribrach and onto a tripod.
2.	Using the tribrach footscrews, level the instrument with the electronic level.
3.	Access the electronic level and laser plummet by using the key-combination <**FNC**> +<**.**> or by starting GeoMax Toolkit and go to **MAIN MENU** screen and select **Level**.

4. Check the position of the circular level on the instrument and tribrach:
   a) If both circular levels are centred, no adjustments are necessary.
   b) If one or both circular levels are not centred, adjust as follows:
      - **Instrument**: If it extends beyond the circle, use the supplied allen key to centre it with the adjustment screws. Turn the instrument by 200 gon (180°). Repeat the adjustment procedure if the circular level does not stay centred.
      - **Tribrach**: If it extends beyond the circle, use the supplied allen key to centre it with the adjustment screws.

☞ After the adjustments, all adjusting screws must have the same tightening tension and no adjusting screw should be loose.

6.2.5 Adjusting the Circular Level of the Prism Pole

Adjusting the circular level step-by-step

1. Suspend a plumb line.
2. Use a pole bipod, to align the prism pole parallel to the plumb line.
3. Check the position of the circular level on the prism pole.
4. a If the circular level is centred, no adjustment is necessary.

   b If the circular level is not centred, use an allen key to centre it with the adjustment screws.

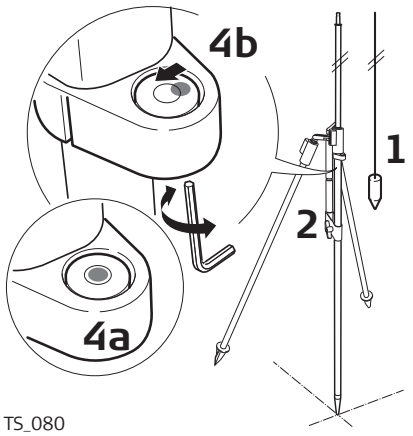

TS_080

☞ After the adjustments, all adjusting screws must have the same tightening tension and no adjusting screw should be loose.

6.2.6 Inspecting the Laser Plummet of the Instrument

☞ The laser plummet is located in the vertical axis of the instrument. Under normal conditions of use, the laser plummet does not need adjusting. If an adjustment is necessary due to external influences, return the instrument to any GeoMax authorised service workshop.

Inspecting the laser plummet step-by-step

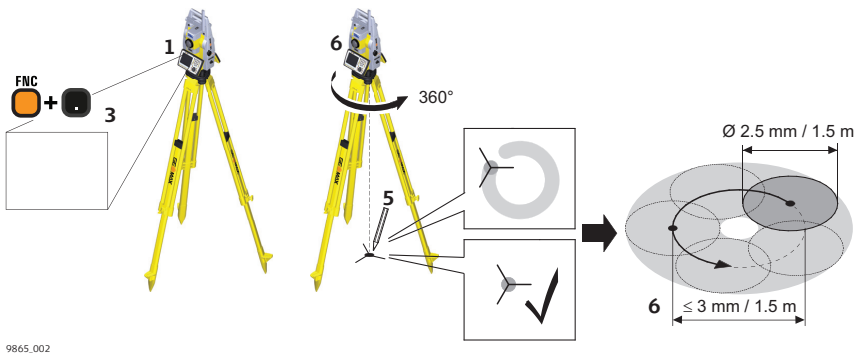

The following table explains the most common settings.

1. Place and secure the instrument into the tribrach and onto a tripod.

2.	Using the tribrach footscrews, level the instrument with the electronic level.
3.	Access the electronic level and laser plummet by using the key-combination <**FNC**> +<**.**> or by starting GeoMax Toolkit and go to **MAIN MENU** screen and select **Level**.
4.	The laser plummet is switched on automatically when the **Level up** screen is entered. Adjust the laser plummet intensity. Inspection of the laser plummet should be carried out on a bright, smooth and horizontal surface, like a sheet of paper.
5.	Mark the centre of the red dot on the ground.
6.	Turn the instrument through 360° slowly, carefully observing the movement of the red laser dot.
☞	The maximum diameter of the circular movement described by the centre of the laser point must not exceed 3 mm at a distance of 1.5 m.
7.	If the centre of the laser dot describes a perceptible circular movement, or moves more than 3 mm away from the point which was first marked, an adjustment may be required. Inform your nearest GeoMax authorised service workshop. Depending on brightness and surface, the diameter of the laser dot can vary. At 1.5 m, it is about 2.5 mm.

6.2.7 Servicing the Tripod

Service the tripod step-by-step

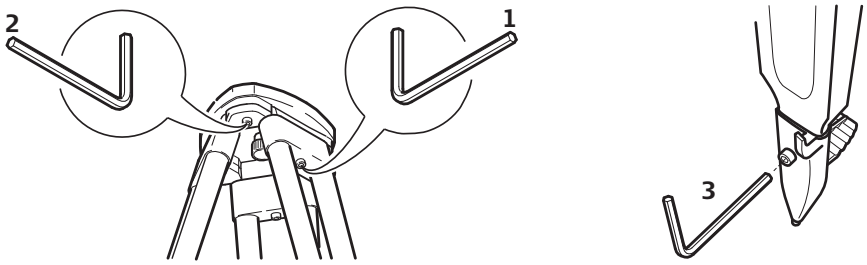

1.	Tighten the leg cap screws moderately with the allen key supplied.
2.	Tighten the articulated joints on the tripod head just enough to keep the tripod legs open when lifting the tripod off the ground.
3.	Tighten the screws of the tripod legs.
☞	The connections between metal and timber components must always be firm and tight.

6.3 Format

Description

Formatting deletes all formats, firmware and languages. All settings are reset to default.

Access

1.	Select **Apps** from the **MAIN MENU**.
2.	Select **Format** from the **APPS** menu.

☞ Before selecting **Format**, to format the **System**, ensure that all important data is first transferred to a computer. Keys, uploaded firmware and languages are deleted by formatting.

7 Care and Transport

7.1 Transport

Transport in the field

When transporting the equipment in the field, always make sure that you

- either carry the product in its original container,
- or carry the tripod with its legs splayed across your shoulder, keeping the attached product upright.

Transport in a road vehicle

Never carry the product loose in a road vehicle, as it can be affected by shock and vibration. Always carry the product in its container and secure it.

For products for which no container is available use the original packaging or its equivalent.

Shipping

When transporting the product by rail, air or sea, always use the complete original GeoMax packaging, container and cardboard box, or its equivalent, to protect against shock and vibration.

Shipping, transport of batteries

When transporting or shipping batteries, the person responsible for the product must ensure that the applicable national and international rules and regulations are observed. Before transportation or shipping, contact your local passenger or freight transport company.

Field adjustment

Exposing the product to high mechanical forces, for example through frequent transport or rough handling, or storing the product for a long time may cause deviations and a decrease in the measurement accuracy. Periodically carry out test measurements and perform the field adjustments indicated in the User Manual before using the product.

7.2 Storage

Product

Respect the temperature limits when storing the equipment, particularly in summer if the equipment is inside a vehicle. Refer to "8 Technical Data" for information about temperature limits.

Li-Ion batteries

- Refer to "8 Technical Data" for information about storage temperature range.
- Remove batteries from the product and the charger before storing.
- After storage recharge batteries before using.
- Protect batteries from damp and wetness. Wet or damp batteries must be dried before storing or use.
- A storage temperature range of 0 °C to +30 °C / +32 °F to +86 °F in a dry environment is recommended to minimize self-discharging of the battery.
- At the recommended storage temperature range, batteries containing a 40% to 50% charge can be stored for up to one year. After this storage period the batteries must be recharged.

7.3 Cleaning and Drying

Product and accessories

- Blow dust off lenses and prisms.
- Never touch the glass with your fingers.
- Use only a clean, soft, lint-free cloth for cleaning. If necessary, moisten the cloth with water or pure alcohol. Do not use other liquids; these may attack the polymer components.

Fogging of prisms

Prisms that are cooler than the ambient temperature tend to fog. It is not enough simply to wipe them. Keep them for some time inside your jacket or in the vehicle to allow them to adjust to the ambient temperature.

Damp products

Dry the product, the transport container, the foam inserts and the accessories at a temperature not greater than 40°C /104°F and clean them. Remove the battery cover and dry the battery compartment. Do not repack until everything is completely dry. Always close the transport container when using in the field.

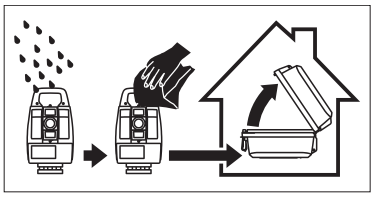

Cables and plugs

Keep plugs clean and dry. Blow away any dirt lodged in the plugs of the connecting cables.

7.4 Maintenance

☞

An inspection of the motorisation in motorised instruments must be done in a GeoMax authorised service centre. GeoMax recommends an inspection of the product every 12 months.

For instruments which are in intensive or permanent use, for example tunnelling or monitoring, the recommended inspection cycle may be reduced.

8 Technical Data

8.1 Angle Measurement

Accuracy

Available angular accuracies	Standard deviation Hz, V, ISO 17123-3	Display resolution
["]	[mgon]	["]
1	0.3	0.1
2	0.6	0.1
5	1.5	0.1

Characteristics

Absolute, continuous, diametric.

8.2 Distance Measurement with Reflectors

Range

Reflector	Range A		Range B		Range C	
	[m]	[ft]	[m]	[ft]	[m]	[ft]
Standard prism (ZPR100)	1800	6000	3000	10000	3500	12000
Three standard prisms (ZPR100)	2300	7500	4500	14700	5400	17700
360° prism (ZPR1, GRZ122)	800	2600	1500	5000	2000	7000
Mini prism (ZMP100)	800	2600	1200	4000	2000	7000
Mini prism (ZMP101)	800	2600	1200	4000	2000	7000
Reflector tape (ZTM100) 60 mm x 60 mm	150	500	250	800	250	800

Shortest measuring distance: 1.5 m

Atmospheric conditions

Range	Description
A	Strong haze, visibility 5km; or strong sunlight, severe heat shimmer
B	Light haze, visibility about 20km; or moderate sunlight, slight heat shimmer
C	Overcast, no haze, visibility about 40km; no heat shimmer

☞ Measurements can be made to reflector tapes over the entire range without external ancillary optics.

Accuracy

Accuracy refers to measurements to standard prisms.

EDM measuring mode	std. dev. ISO 17123-4, standard prism	std. dev. ISO 17123-4, tape	Measurement time, typical [s]
Standard	1 mm + 1.5 ppm	3 mm + 2 ppm	2.4
Single(fast)	2 mm + 1.5 ppm	3 mm + 2 ppm	0.8
Continuous	3 mm + 1.5 ppm	3 mm + 2 ppm	< 0.15

Beam interruptions, severe heat shimmer and moving objects within the beam path can result in deviations of the specified accuracy.

The display resolution is 0.1 mm.

Characteristics

Principle:	Phase measurement
Type:	Coaxial, visible red laser
Carrier wave:	658 nm
Measuring system:	System analyser basis 100 MHz - 150 MHz

8.3 Distance Measurement without Reflectors

Range

A5

Kodak Gray Card	Range D		Range E		Range F	
	[m]	[ft]	[m]	[ft]	[m]	[ft]
White side, 90 % reflective	250	820	400	1310	>500	>1640
Grey side, 18 % reflective	150	490	200	660	>200	>660

A10

Kodak Gray Card	Range D		Range E		Range F	
	[m]	[ft]	[m]	[ft]	[m]	[ft]
White side, 90 % reflective	800	2630	1000	3280	>1000	>3280
Grey side, 18 % reflective	400	1320	500	1640	>500	>1640

Range of Measurement:	1.5 m - 1200 m
Display unambiguous:	up to 1200 m

Atmospheric conditions

Range	Description
D	Object in strong sunlight, severe heat shimmer
E	Object in shade, or overcast
F	Underground, night and twilight

Accuracy

Standard measuring	Standard deviation ISO 17123-4	Measure time, typical [s]	Measure time, maximum [s]
0 m - 500 m	2 mm + 2 ppm	3 - 6	12
>500 m	4 mm + 2 ppm	3 - 6	12

Object in shade, sky overcast. Beam interruptions, severe heat shimmer and moving objects within the beam path can result in deviations of the specified accuracy. The display resolution is 0.1 mm.

Characteristics

Type	Description
Type	Coaxial, visible red laser

Type	Description
Carrier wave	658 nm
Measuring system	System Analyzer Basis 100 MHz - 150 MHz

Laser dot size

Distance [m]	Laser dot size, approximately [mm]
at 30	7 x 10
at 50	8 x 20
at 100	16 x 25

8.4 Distance Measurement - Long Range (LO mode)

Range

The range of the long range measurements is the same for A5 and A10.

Reflector	Range A		Range B		Range C	
	[m]	[ft]	[m]	[ft]	[m]	[ft]
Standard prism (ZPR100)	2200	7300	7500	24600	>10000	>33000

Range of measurement: 1000 m to 12000 m

Display unambiguous: up to 12000 m

Atmospheric conditions

Range	Description
A	Strong haze, visibility 5km; or strong sunlight, severe heat shimmer
B	Light haze, visibility about 20km; or moderate sunlight, slight heat shimmer
C	Overcast, no haze, visibility about 40km; no heat shimmer

Accuracy

Standard measuring	Standard deviation ISO 17123-4	Measure time, typical [s]	Measure time, maximum [s]
Long Range	5 mm + 2 ppm	2.5	12

Beam interruptions, severe heat shimmer and moving objects within the beam path can result in deviations of the specified accuracy. The display resolution is 0.1 mm.

Characteristics

Type	Description
Principle	Phase measurement
Type	Coaxial, visible red laser
Carrier wave	658nm
Measuring system	System Analyzer Basis 100MHz - 150MHz

8.5 Automatic Prism Aiming AiM

Range AiM/TRack

Reflector	Range AiM mode		TRack mode	
	[m]	[ft]	[m]	[ft]
Standard prism (ZPR100)	1000	3300	800	2600
360° prism (ZPR1, GRZ122)	800	2600	600	2000
360° Mini prism (GRZ101)	350	1150	200	660
Mini prism (ZMP100)	500	1600	400	1300
Mini prism (ZMP101)	500	1600	400	1300
Reflector tape 60 mm x 60 mm (ZTM100)	45	150	not qualified	

☞ The maximum range can be restricted by poorer conditions, for example rain.

Shortest measuring distance: 360° prism AiM:	1.5 m
Shortest measuring distance: 360° prism TRack:	5 m

AiM accuracy with the ZPR100 prism

AiM angle accuracy Hz, V (std. dev. ISO 17123-3):	1 " (0.3 mgon)
Base Positioning accuracy (std.dev.):	± 1 mm

System Accuracy

Several factors can influence the system's accuracy for determining the location of a prism:
- Internal AiM accuracy
- Angular accuracy of the instrument
- Type and centring accuracy of the prism
- Selected EDM measuring program
- External measuring conditions

Therefore, the overall pointing accuracy of the determined point location can be lower than the given angular accuracy and the AiM accuracy.

The following paragraphs provide a short overview of these influencing factors and their possible intensities.

Angular accuracy

The accuracy of angular measurements depends on the instrument type. The angular accuracy for total stations is typically in the range from 0.5″ to 5″. The resulting error depends on the measurement distance.

Angular accuracy	Possible deviation* at 100 m distance
1″	~0.5 mm
3″	~1.5 mm

* Orthogonal to the line of sight.

☞ Refer to the data sheet of the respective instrument model for information about the angular accuracy.

EDM accuracy

The distance measurement accuracy consists of two parts: a fixed value and a distance-dependent value (ppm-value).

Example: "Single measurements: 1 mm + 1.5 ppm"

The EDM accuracies for prism and reflectorless measurements can differ. Additionally, the accuracies can differ depending on the used technologies.

☞ Refer to the appropriate data sheet for information about the EDM accuracy.

AiM accuracy

Automatic target aiming accuracies, like those of the AiM, are in general the same as the stated angular accuracy. Therefore these accuracies are also distance-dependent parameters.

External impacts, like heat shimmer, rain (prism surface covered by rain drops), fog, dust, strong background lights, dirty targets, alignment of the targets etc. can have a significant influence on the automated target. In addition the selected EDM mode affects the AiM performance. Under good environmental conditions and with a clean, properly aligned target the accuracy of the automated target aiming is equivalent to the manual target aiming (presumed valid calibration values).

Type and centring accuracy of the prism

The prism centring accuracy depends mainly on the used prism type, for example:

Prism type		Centring accuracy
GeoMax ZPR100	Circular prism	1.0 mm
GeoMax GRZ122	360° prism	2.0 mm
GeoMax ZPR1	360° prism	5.0 mm

Additional influencing factors

When determining absolute coordinates, the following parameters can also affect the resulting accuracy:
- Environmental conditions: temperature, air pressure and humidity
- Typical instrument errors, such as horizontal collimation error or index error.
- Proper functioning of laser plummet or optical plummet
- Correct horizontal levelling
- Setup of the target
- Quality of additional equipment, such as tribrach or tripod.

Maximum speed in TRack mode

Maximum tangential speed:	5 m/s at 20 m; 25 m/s at 100 m
Maximum radial speed with Measure mode: Continuous	5 m/s

Searching

Type	Value
Typical search time in field of view	1.5 s
Field of view	1°25’/1.55 gon
Definable search windows	Yes

Characteristics

Type	Description
Principle	Digital image processing
Type	Infrared laser

8.6 Prism Search (Scout) - only available at Zoom90

Range

Reflector	Range PS	
	[m]	[ft]
Standard prism (ZPR100)	300	1000
360° prism (ZPR1, GRZ122)	300*	1000*
360° mini prism (GRZ101)	Not recommended	
Mini prism (ZMP100)	100	330

Measurements at the vertical limits of the fan or under unfavourable atmospheric conditions may reduce the maximum range. (*optimally aligned to the instrument)

Shortest measuring distance: 1.5 m

Searching

Type	Value
Typical search time	<10 s
Default search area	Hz: 400 gon, V: 40 gon
Definable search windows	Yes

Characteristics

Type	Description
Principle	Digital signal processing
Type	Infrared laser

8.7 Conformity to National Regulations

8.7.1 Zoom70/90

Conformity to national regulations

- FCC Part 15 (applicable in US).
- Hereby, GeoMax AG declares that the radio equipment type Zoom70/90 is in compliance with Directive 2014/53/EU and other applicable European Directives.
  The full text of the EU declaration of conformity is available at the following Internet address: http://www.geomax-positioning.com/Downloads.htm.

CE Class 1 equipment according to European Directive 2014/53/EU (RED) can be placed on the market and be put into service without restrictions in any EEA member state.

- The conformity for countries with other national regulations not covered by the FCC part 15 or European Directive 2014/53/EU has to be approved prior to use and operation.

Frequency band

Value
2402 - 2480 MHz

Output power

Bluetooth
7.8 mW max.

Antenna

Description	Value
Type	Internal Microstrip antenna
Gain	1.5 dBi

8.7.2 RadioHandle

Conformity to national regulations

- FCC Part 15 (applicable in US).
- Hereby, GeoMax AG declares that the radio equipment type ZRT81/ZRT82 is in compliance with Directive 2014/53/EU and other applicable European Directives.
  The full text of the EU declaration of conformity is available at the following Internet address: http://www.geomax-positioning.com/Downloads.htm.

Class 1 equipment according to European Directive 2014/53/EU (RED) can be placed on the market and be put into service without restrictions in any EEA member state.

- The conformity for countries with other national regulations not covered by the FCC part 15 or European Directive 2014/53/EU has to be approved prior to use and operation.

Frequency band

Value
Limited to 2402 - 2480 MHz

Output power

Value
< 100 mW (e. i. r. p.)

Antenna

Type	λ/2 dipole antenna
Gain [dBi]	2
Connector	Special customized SMB

8.7.3 Dangerous Goods Regulations

Dangerous Goods Regulations

The products of GeoMax are powered by Lithium batteries.

Lithium batteries can be dangerous under certain conditions and can pose a safety hazard. In certain conditions, Lithium batteries can overheat and ignite.

When carrying or shipping your GeoMax product with Lithium batteries onboard a commercial aircraft, you must do so in accordance with the **IATA Dangerous Goods Regulations**.

GeoMax has developed **Guidelines** on "How to carry GeoMax products" and "How to ship GeoMax products" with Lithium batteries. Before any transportation of a GeoMax product, we ask you to consult these guidelines on our web page (http://www.geomax-positioning.com/dgr) to ensure that you are in accordance with the IATA Dangerous Goods Regulations and that the GeoMax products can be transported correctly.

Damaged or defective batteries are prohibited from being carried or transported onboard any aircraft. Therefore, ensure that the condition of any battery is safe for transportation.

8.8 General Technical Data of the Product

Telescope

Type	Value
Magnification	30x
Free objective aperture	40 mm
Focusing	1.55 m/5.1 ft to infinity
Field of view	1°30'/1.66 gon 2.7 m at 100 m

Compensator

Angular accuracy instrument ["]	Setting accuracy		Setting range	
	["]	[mgon]	[']	[gon]
1	0.5	0.2	4	0.07

Angular accuracy instrument ["]	Setting accuracy		Setting range	
	["]	[mgon]	[']	[gon]
2	0.5	0.2	4	0.07
5	1.5	0.5	4	0.07

Level

Type	Value
Circular level sensitivity	6'/2mm
Electronic level resolution	2"

Control unit

Description	Value
Display	VGA (640 x 480 pixels), color TFT, LED backlight, touch screen
Keyboard	34 keys including 12 function keys and 12 alphanumeric keys, illumination
Position	In both faces, face two is optional
Touch screen	Toughened film on glass

Instrument Ports

Name	Description
RS232	• 5 pin LEMO-0 for power, communication, data transfer. • This port is located at the base of the instrument.
Bluetooth Handle	• Hotshoe connection for RadioHandle. • This port is located on top of Communication side cover.
Internal Bluetooth	• Bluetooth module for communication. • This port is housed within Communication side cover.

Instrument dimensions

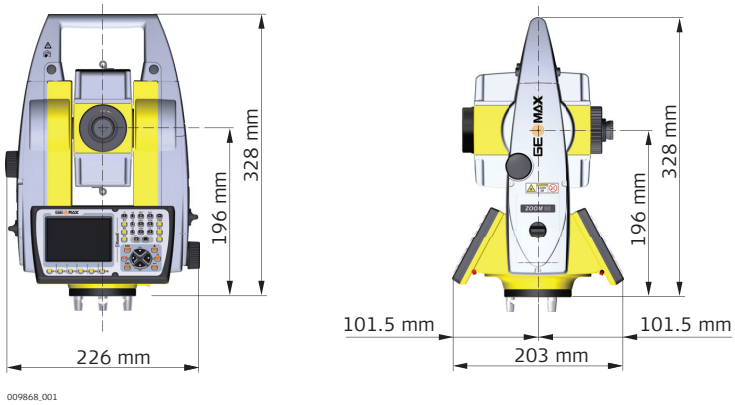

Weight

Component	Value
Instrument	4.8 - 5.5 kg

Component	Value
Tribrach	0.8 kg
Internal battery	0.2 kg

Recording

Data can be recorded onto an SD card or into internal memory.

Type	Capacity
SD card	1 GB
Internal memory	1 GB

Laser plummet

Type	Value
Type	Visible red laser class 2
Location	In standing axis of instrument
Accuracy	Deviation from plumb line:1.5mm (2 sigma) at 1.5m instrument height
Diameter of laser point	2.5mm at 1.5m instrument height

Drives

Description
Endless horizontal and vertical drives

Motorisation

Type	Description
Maximum rotating speed	50 gon/s

Power

Type	Description
External supply voltage	Nominal 12 V ⎓, Range 11.5 V-13.5 V, 1.4 A max

☞ The supply shall be intended to use to class II type of local certified adapter.

Internal battery

Type	Battery	Voltage	Capacity
ZBA400	Li-Ion	7.4 V ⎓	4.4 Ah

Environmental specifications

Temperature

Type	Operating temperature [°C]	Storage temperature [°C]
All instruments	-20 to +50	-40 to +70
GeoMax SD cards	-40 to +80	-40 to +80
Battery internal	-20 to +55	-40 to +70
Bluetooth	-30 to +60	-40 to +80

Protection against water, dust and sand

Type	Protection
All instruments	IP55 (IEC 60529)

Humidity

Type	Protection
All instruments	Max 95 % non condensing The effects of condensation are to be effectively counteracted by periodically drying out the instrument.

Reflectors

Type	Additive Constant [mm]	AiM	Scout
Standard prism, ZPR100	0	yes	yes
Mini prism, ZMP100	0	yes	yes
Mini prism, ZMP101	+17.5	yes	yes
360° prism, ZPR1 / GRZ122	+23.1	yes	yes
360° Mini prism, GRZ101	+30.0	yes	not recommended
Reflector tape S, M, L	+34.4	yes	no
Reflectorless	+34.4	no	no

There are no special prisms required for AiM or for Scout.

Navigation Light (NavLight)

Description	Value
Working range	5 m to 150 m (15 ft to 500 ft)
Position accuracy	5 cm at 100 m (1.97" at 330 ft)

Automatic corrections

The following automatic corrections are made:

- Line of sight error
- Tilting axis error
- Earth curvature
- Circle eccentricity
- Compensator index error
- Vertical index error
- Standing axis tilt
- Refraction
- AiM zero point error

8.9 Scale Correction

Use of scale correction

By entering a scale correction, reductions proportional to distance can be taken into account.

- Atmospheric correction.
- Reduction to mean sea level.
- Projection distortion.

Atmospheric correction ΔD1

The slope distance displayed is correct if the scale correction in ppm, mm/km, which has been entered corresponds to the atmospheric conditions prevailing at the time of the measurement.

The atmospheric correction includes:

- Adjustments for air pressure
- Air temperature
- Relative humidity

For highest precision distance measurements, the atmospheric correction should be determined with an accuracy of 1 ppm. The following parameters must be redetermined:

- Air temperature to 1 °C
- Air pressure to 3 mbar
- Relative humidity to 20 %

Air humidity

The air humidity influences the distance measurement if the climate is extremely hot and damp.

For high precision measurements, the relative humidity must be measured and entered along with the air pressure and the temperature.

Air humidity correction

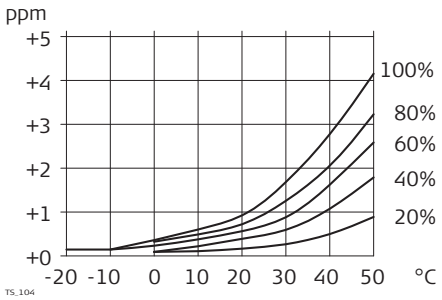

ppm Air humidity correction [mm/km]
% Relative humidity [%]
C° Air temperature [°C]

Index n

Type	Index n	Carrier wave [nm]
Combined EDM	1.0002863	658

The index n is calculated from the formula of the IAG Resolutions (1999), and is valid for:

Air pressure p:	1013.25 mbar
Air temperature t:	12 °C
Relative air humidity h:	60 %

Formulas

Formula for visible red laser

$$\Delta D_1 = 286.338 - \left[\frac{0.29535 \cdot p}{(1 + \alpha \cdot t)} - \frac{4.126 \cdot 10^{-4} \cdot h}{(1 + \alpha \cdot t)} \cdot 10^{x} \right]$$

002419_002

ΔD_1	Atmospheric correction [ppm]
p	Air pressure [mbar]
t	Air temperature [°C]
h	Relative humidity [%]
α	$\frac{1}{273.15}$
x	(7.5 * t/(237.3 + t)) + 0.7857

If the basic value of 60 % relative humidity as used by the EDM is retained, the maximum possible error in the calculated atmospheric correction is 2 ppm, 2 mm/km.

Reduction to mean sea level ΔD_2

The values for ΔD_2 are always negative and are derived from the following formula:

$$\Delta D_2 = -\frac{H}{R} \cdot 10^6$$

TS_106

ΔD_2	Reduction to mean sea level [ppm]
H	Height of EDM above sea level [m]
R	6.378 * 10^6 m

Atmospheric corrections °C

Atmospheric corrections in ppm with temperature [°C], air pressure [mb] and height [m] at 60% relative humidity.

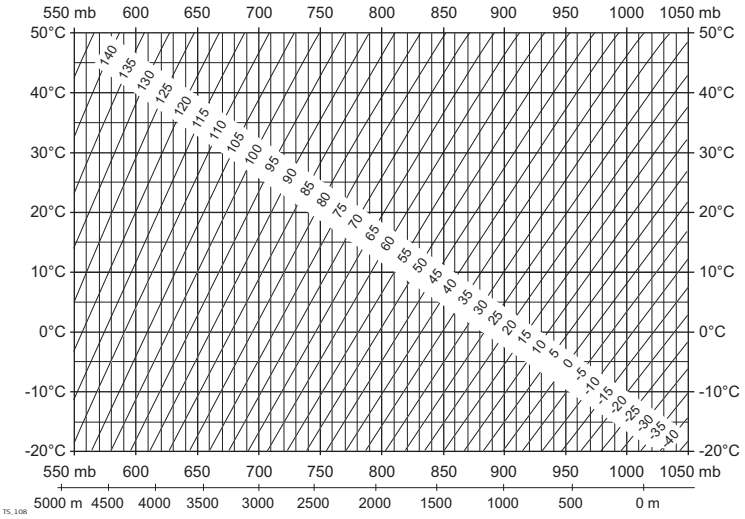

TS_108

Atmospheric corrections °F

Atmospheric corrections in ppm with temperature [°F], air pressure [inch Hg] and height [ft] at 60% relative humidity.

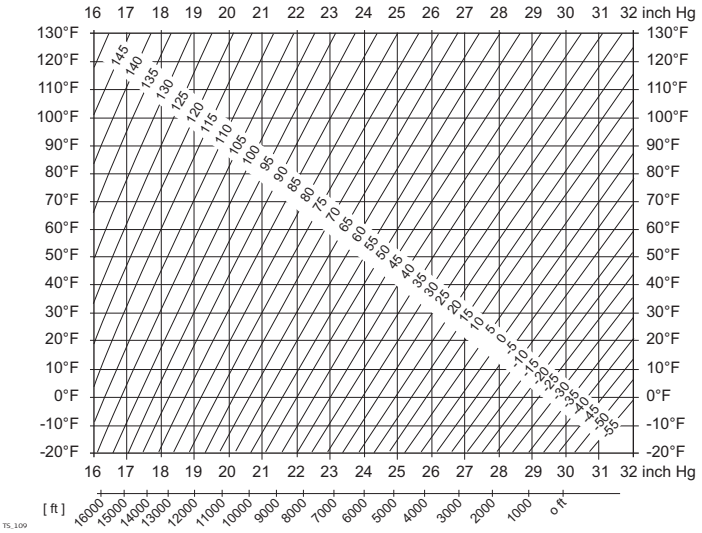

TS_109

8.10 Reduction Formulas

Formulas

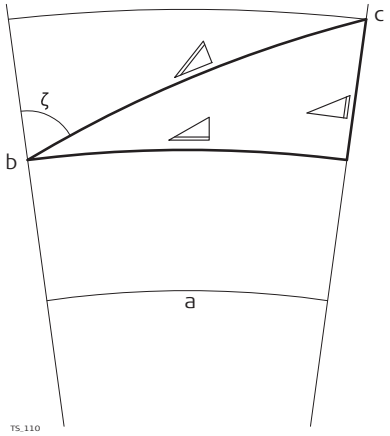

a Mean Sea Level
b Instrument
c Reflector

◿ Slope distance
◿ Horizontal distance
◿ Height difference

The instrument calculates the slope distance, horizontal distance, height difference in accordance with the following formulas:

$$◿ = D_0 \cdot (1 + ppm \cdot 10^{-6}) + AC$$

002425_002

◿ Displayed slope distance [m]
D_0 Uncorrected distance [m]
ppm Atmospheric scale correction [mm/km]
AC Additive constant of the reflector [m]

$$◿ = Y - A \cdot X \cdot Y$$

TS_112

$$◿ = X + B \cdot Y^2$$

TS_113

◿ Horizontal distance [m]
◿ Height difference [m]
Y ◿ * |sinζ|
X ◿ * cosζ
ζ Vertical circle reading
A $(1 - k / 2) / R = 1.47 * 10^{-7}$ [m^{-1}]
B $(1 - k) / (2 * R) = 6.83 * 10^{-8}$ [m^{-1}]
k 0.13 (mean refraction coefficient)
R $6.378 * 10^6$ m (radius of the earth)

Earth curvature (1/R) and mean refraction coefficient (k) are automatically taken into account when calculating the horizontal distance and height difference. The calculated horizontal distance relates to the station height and not to the reflector height.

Reflector types

The reduction formulas are valid for measurements to all reflector types:

- To prisms
- To reflector tape
- Reflectorless measurements

9 Software Licence Agreement

Software Licence Agreement

This product contains software that is preinstalled on the product, or that is supplied to you on a data carrier medium, or that can be downloaded by you online according to prior authorisation from GeoMax. Such software is protected by copyright and other laws and its use is defined and regulated by the GeoMax Software Licence Agreement, which covers aspects such as, but not limited to, Scope of the Licence, Warranty, Intellectual Property Rights, Limitation of Liability, Exclusion of other Assurances, Governing Law and Place of Jurisdiction. Please make sure, that at any time you fully comply with the terms and conditions of the GeoMax Software Licence Agreement.

Such agreement is provided together with all products and can also be referred to and downloaded at the GeoMax home page at http://www.geomax-positioning.com/swlicense or collected from your GeoMax distributor.

You must not install or use the software unless you have read and accepted the terms and conditions of the GeoMax Software Licence Agreement. Installation or use of the software or any part thereof, is deemed to be an acceptance of all the terms and conditions of such Licence Agreement. If you do not agree to all or some of the terms of such Licence Agreement, you must not download, install or use the software and you must return the unused software together with its accompanying documentation and the purchase receipt to the distributor from whom you purchased the product within ten (10) days of purchase to obtain a full refund of the purchase price.

Open Source Information

The software on the product may contain copyright-protected software that is licensed under various open source licences.

Copies of the corresponding licences
- are provided together with the product (for example in the About panel of the software)
- can be downloaded on http://www.geomax-positioning.com/zoom90/opensource.

If foreseen in the corresponding open source licence, you may obtain the corresponding source code and other related data on http://www.geomax-positioning.com/zoom90/opensource.

10 Glossary

Instrument axis

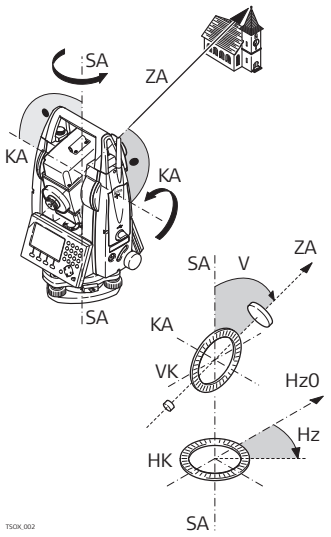

ZA **= Line of sight / collimation axis**
Telescope axis = line from the cross hairs to the center of the objective.

SA **= Standing axis**
Vertical rotation axis of the telescope.

KA **= Tilting axis**
Horizontal rotation axis of the telescope. Also known as the Trunion axis.

V **= Vertical angle / zenith angle**

VK **= Vertical circle**
With coded circular division for reading the vertical angle.

Hz **= Horizontal direction**

HK **= Horizontal circle**
With coded circular division for reading the horizontal angle.

Plumb line / compensator

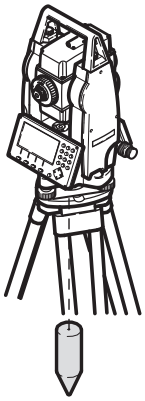

Direction of gravity. The compensator defines the plumb line within the instrument.

Standing axis inclination

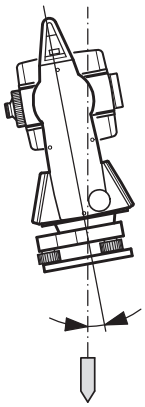

Angle between plumb line and standing axis.
Standing axis tilt is not an instrument error and is not eliminated by measuring in both faces. Any possible influence it may have on the horizontal direction or vertical angle is eliminated by the dual axis compensator.

Zenith

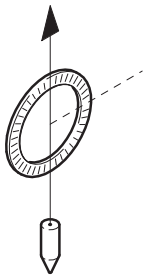

Point on the plumb line above the observer.

Crosshairs

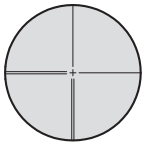

Glass plate within the telescope with reticle.

Line-of-sight error (horizontal collimation)

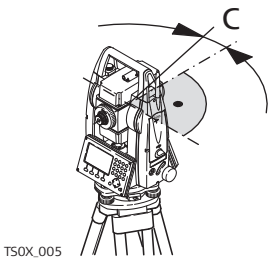

The line-of-sight error (c) is the deviation from the perpendicular between the tilting axis and line of sight. This could be eliminated by measuring in both faces.

Vertical index error

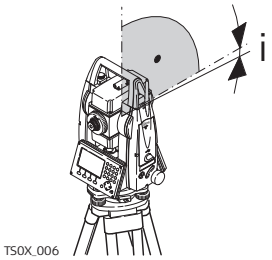

With a horizontal line of sight the vertical circle reading should be exactly 90°(100 gon). The deviation from this value is termed the Vertical index error (i).

Appendix A Menu Tree

Depending on local firmware versions the menu items may differ.

Menu Tree GeoMax Toolkit

- **Level**
- **Sysinfo**
- **Settings**
  - Unit
    - Angle, Distance, Temperature, Pressure
  - Date/Time
    - Time(24h), Date, Format
  - Comm.
    - RS232, Bluetooth Handle, Internal Bluetooth
  - Atmos.
    - Z(MSL), Temperature, Pressure, Humidity, Atmos PPM, Refr. Coeff, Use Refr. C.
- **Apps**
  - Update
    - Firmware, Language, Key
  - Calib.
    - Calibrate All, Calibrate without AiM, View Adjustment Data
  - Format
    - System, SD Card

Appendix B Directory Structure

Description

On the USB memory stick, files are stored in certain directories. The following diagram is the default directory structure.

Directory structure

|—— **SYSTEM** • Firmware files

Appendix C Pin Assignments

Description

Some applications require knowledge of the pin assignments for the instrument port.

In this chapter, the pin assignments and socket for the RS232 port of the Zoom70/90 instrument are explained.

Ports at the Zoom70/90 instrument

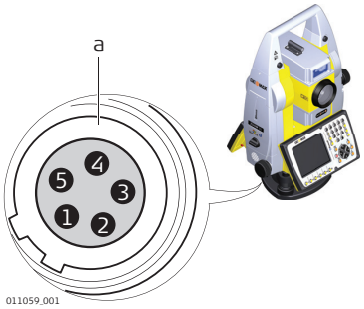

a RS232

Pin assignments for RS232 port

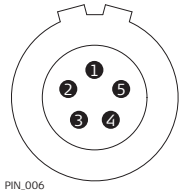

Pin	Signal Name	Function	Direction
1	PWR	Nominal 12 V ⎓, Range 11.5 V-13.5 V, 1.4 A max	In
2	-	Not used	-
3	GND	Single ground	-
4	RxD	RS232, receive data	In
5	TxD	RS232, transmit data	Out

837009-2.1.0en
Original text
© 2018 GeoMax AG, Widnau, Switzerland

GeoMax AG
www.geomax-positioning.com